Government of the People's Republic of Bangladesh
Ministry of Local Government, Rural Development and Co-operatives
(Local Government Division)

Environmental and Social Screening Report
on
Construction of Solid Waste Management Schemes including O & M

Location: Camp20, Block-M35 (Vol.2), Sub-project (Package No.): EMCRP/WD-08

Emergency Multi-Sector Rohingya Crisis Response Project (GoB-WB)

Department of Public Health Engineering (DPHE)

Abbreviation and Acronyms

ACF	Action Against Hunger
ABR	Anaerobic Baffled Reactor
BBS	Bangladesh Bureau of Statistics
BD	Bangladesh
BoQ	Bill of Quantities
BMD	Bangladesh Meteorological Department
CIC	Camp in Charge
DC	Deputy Commissioner
DO	Dissolved Oxygen
DoF	Department of Forest
DPD	Deputy Project Director
DPHE	Department of Public Health Engineering
DRP	Displaced Rohingya Population
DTW	Deep Tubewell
DTTW	Deep Tara Tubewell
EC	Electrical Conductivity
EE	Executive Engineer
EMCRP	Emergency Multi-sector Rohingya Crisis Response Project
ERP	Emergency Response Plan
ESMF	Environmental & Social Management Framework
ESMP	Environmental and Social Management Plan
SWM	Solid waste management
FAO	Food and Agriculture Organization
FGD	Community consultation
GBV	Gender-Based Violence
GoB	Government of The People's Republic of Bangladesh
GRC	Grievance Redress Committee
GRM	Grievance Redress Mechanism
GPS	Global Positioning System
GW	Ground Water
HBB	Herring-Bone-Bond
HDPE	High Density Polyethylene
HH	Household
IEF	Important Environmental Feature
IOM	International Organization for Migration
ISCG	Inter Sector Coordination Group
IUCN	International Union for Conservation of Nature
NGO	Non-Government Organization
LGED	Local Government Engineering Department
PD	Project Director
PMU	Project Implementation Unit
PM	Particulate Matter
PMU	Project Management Unit
PPE	Personal Protective Equipment
PSC	Project Steering Committee
PTW	Production Tube well
PVC	Polyvinyl Chloride
ROW	Right of Way

RRRC	Refugee Relief and Repatriation Commission
SAE	Sub–Assistant Engineer
SMC	School Management Committee
SW	Surface water
SWM	Solid Waste Management
TDS	Total Dissolved Solids
TSS	Total Suspended Solids
TTW	Test Tube Well
UN	United Nations
UNFPA	United Nations Fund for Population Activities
UNHCR	United Nations High Commissioner for Refugees
uPVC	Un plasticized Polyvinyl Chloride
VfM	Value for Money
WASH	Water, Sanitation and Hygiene
WB	World Bank
WDZ	Water Distribution Zone
WFP	World Food Programme
WSC	Women's Studies Center

EMCRP (DPHE part)

Environmental and Social Screening Form

Sub-Project Description Form

Introduction: Under the EMCRP, DPHE will develop a proper Solid Waste ManagementSystem (SWMS) within the DRP camp area. Under that SWMS, DPHE will provide 100,000 nos. buckets (50,000 nos. red and 50,000 nos. green) for collection of HH waste, 150 nos. communal garbage bins (separate portion for organic & inorganic waste), 50 nos. Bin/Barrel composting system& 7 nos. box composting systemat different locations of DRP camps. This screening report is prepared for a SWM system at Camp_20, where 1 (one) Box composting unit is included as **Volume 2.**

Name of Sub-project: Development of Camp basedSWMincluding Operation and Maintenance Scheme under Cont. no. WD08 for Displaced Rohingya Population(DRP) at Palongkhali union,UkhiyaUpazila, Cox's Bazar.

Implementing Agency/Agencies: Department of Public Health Engineering (DPHE)

Estimated total cost forSWMS(in Taka): Approximate 12,17,22,617.83. Unit cost of each part of SWMS given in ***Appendix-05***

Estimated construction period duration: 12 (twelve) months.

Estimated Operation and Maintenance period *(life of sub-project)*: Operation & Maintenance period ofSWM is 24 (twenty-four) months.

District: Cox's Bazar **Sub-District:** Ukhiya **Union:** Palongkhali

Name of Community/Local Area: Camp20, Block-M35 (Vol.2)

Description of proposed sub-project activities (incl. type of activities, footprint area, natural resources required, etc.):

Sub-project Activities:

Development of collection system of solid waste (providing Buckets for Collection of Household Solid Waste) and construction of communal garbage bin with soak well & box composting system (for 5000 people)are the main components of SWM system. Detail description of these items (1.Buckets for Collection of Household Solid Waste, 2 nos. Communal Garbage Bin 3 nos.Bin/Barrel Composting System 4 nos. Box Composting system) and design are incorporated within ***Appendix 4.***Box composting system consisting of composting box, maturing box, waste reception chamber, secondary drain, shed, operation room, boundary wall, etc. To implement the proposed subproject intervention following tentative activities to be performed at sub-project areas

- Site selection (already done), site cleaning, earth excavation;
- Construction of communal garbage bin with soak well;
- Construction of wall foundation (composting box, maturation box, chamber, operation room, etc.), brick wall & RCC wall construction for different part of the box composting system, construction of different part of the box composting system;
- Construction of shed;
- Providing filter media for the communal bin, composting box;
- Construction of storage & maintenance room;
- Operation & Maintenance work of SWM;
- Environmental & Social safeguard monitoring Works during construction & operation.

Estimated footprint / land area: Proposed lands for constructing thesolid waste composing system & communal bins are vacant, actually vacant lands within DRP camparea are selected for developing the SWM system. It's been roughly estimated that about 300square meter land would be required for eachBox Composting Plant. The total user covered by the proposed SWM would be about 5,000 people.

Natural Resources: For implementing the proposed intervention some natural resources to be consumed by the project activities (i.e., water and sand& gravel for concreting, making mortar, filter media etc.) and camp site worker (i.e., Water for drinking and kitchen work). Required water would be sourced from nearby the available GW source. Beside sand would be collected from local market.

Brief description of sub-project sites: (e.g., present land use, Important Environmental Features (IEFs) near site, etc.):

ProposedSolid waste management isat Camp_20andBlock-M_35. Proposed land is owned by government and no trees, structures and community properties will be affected. To buildup infrastructures in and around the subproject site, there are mainly DRP houses, earthen drain, low land, hills, drains, etc.There is herringbone bond road close to the sub project area as well as footpath also exists. Effort has been given for listing the major environmental and infrastructural features around the sub-project sites. The key environmental and infrastructural features of Box Composting unit are given in the following table:

Camp no	Block no	Latitude	longitude	Side/ Direction	Surrounding Features
20	M35	21.19323	92.14018	East	BFS road, natural drain, small playground, RCC culvert, DRP tents, trees
				West	Brick road, drain, DRP tents, trees
				North	Playground, bamboo shako, trees, vacant land
				South	Vacant land, DRP tents, trees

Overall Comments:

Reported solid waste generation rate ranges from 0.087 to 0.174 kg/capita/day. Organic waste is the dominant part accounting for 53% -70% of solid waste, and recyclable material about 10%. A detail study was carried out in DRP camp to estimate generation rate and characteristics of solid waste. From the study, waste generation was found to be about 0.184 kg/day/person; organic waste accounted for about 70% of total generation; plastic for about 14%, while other waste types for about 16%. On a camp scale, estimated generation is in the range of 4 to 7 tons/day (Organic 3-5 ton/day; Plastic 0.5-1 ton/day). Different types of storage facilities are being used in the Rohingya camps, both at household level and at community level. Different types of bins have been provided at household level in a number of camps by different organizations. Some of the bins are color-coded to facilitate waste segregation at source. However, the outcome of efforts on source-segregation is not encouraging. Community bins are mainly used in camp areas for storage of solid wastes. The number of community bins in different camps vary widely. The major physical interventions under SWM includes: (1. Providing Buckets for Collection of Household Solid Waste, 2. Communal Garbage Bin, 3. Bin/Barrel Composting system and 4. Box Composting System. Detail description and design are incorporated within ***Appendix-4)***

The major physical interventions (e.g., construction of Communal Solid Waste Bin and Box Composting System) proposed involve small-scale construction, and would not involve use of heavy equipment (e.g., for pile driving) or movement of large number of vehicles and personnel. Therefore, the interventions are unlikely to cause significant air/noise pollution or vibration impacts. All construction activities will be carried out within the selected area of Camp_20. No tree cutting issue during construction and therefore impact on flora and fauna are likely to be insignificant. Efforts have been made to avoid possible surface water, groundwater and soil pollution through appropriate designs and implementing proper environmental management. If properly implemented, the proposed interventions would have significant positive impact, including reduction of environmental pollution and health risks. Safeguard costs are also included within the bidding document. Around 19,21,000 taka (this amount will be finalized after contractor's bidding) is estimated for 7 SWM system (since DPHE will establish 7 SWM system within the camp area). Compost will be produced from the proposed system. A few activities in the Rohingya camps generate demand for compost. These include: (a) Home gardening; and (b) Tree plantation/slope stabilization. These activities create a demand for organic fertilizer/compost to improve soil fertility. Another activity with potentially high demand for compost is the planting of trees for reforestation and slope stabilization (through plantation). Also, there could be demand for compost in the nearby host communities(During feasibility study, ITN-BUET has consulted with host community)

Proposed land is owned by Bangladesh Government, so there is no land acquisition issue. The total user covered by each Box Composting unit of SWMS would be about 5,000. DPHE, together with IWM Environmental & Social safeguard team, PMU Social & Environmental Consultant have conducted Two (02)number of consultationswith DRP communities. Through the coordination and linkage activities of the project, the authorities have accomplished some formal exchange meetings, individual household visits, FGD, Tea Stall discussion and other consultation meetings.Some consultations have also conducted with DRP community leader, CiC, SAE & Mechanic, and relevant stakeholders. Take into account the suggestion/ opinion made by the participants of consultation meetings, potential environmental and social impact for implementing the proposed intervention, and sensitivity of the sites location to protected area/ archeological sites/sensitive receptor, these sites have been selected for constructing the proposed SWM. Outcome of consultation meetings are described within section C: C-2, SL. No. 12.

SWM site selection process:

For conducting the sub-project screening process, DPHE Officials along with IWM Specialists & EMCRP Consultants jointly visited the proposed site (Camp_20). The team primarily selected the site on the basis of transect view, community opinion, existing structures, improved existing SWMcoverage. So, the team finally proposed the location(with GPS) among the other alternative locations.IOM is WASH camp focal and area focal agency of the area and DPHE is implementing agency of the project of which the financial assistance is being provided by the World Bank. After establishing the proposed SWM system in the area, the total user covered by the proposed SWM system would be about 5,000.Detail design& description of different components of the SWM system is incorporated within ***Appendix 4***.

Types of waste to be generated during construction and operation phase:

During construction phase solid and liquid waste will be generated due to construction activities. The types of wastes are uPVC pipe, excavated soil. Concrete, iron, tin, wood piece, lubricants, etc. On the other hand, operation of SWM system will generate leachate, etc. Leachate will be produced from composting box.

Sensitive environmental, cultural, archaeological, religious sites near *(within 1km)* of site including elephant migration routes and remaining forests:

Within theproposed SWM area health post, mosque, meal distribution point, learning center, CiC office, fire point, age facility space, counseling center, community meeting hall, graveyard, child protection facility, community facility, SM (Site Management) agency office, distribution point and information center is identified. However, none is going to be affected due to project intervention. No environmental or social disturbance is anticipated due to construction activities. Elephant footprint was found within the camp area (checked with local IUCN representative&camp Elephant Response Team), but elephant migration route is adjacent to the camp area.

Figure-01: Proposed Box compostingsiteat Camp20, Block-M35.

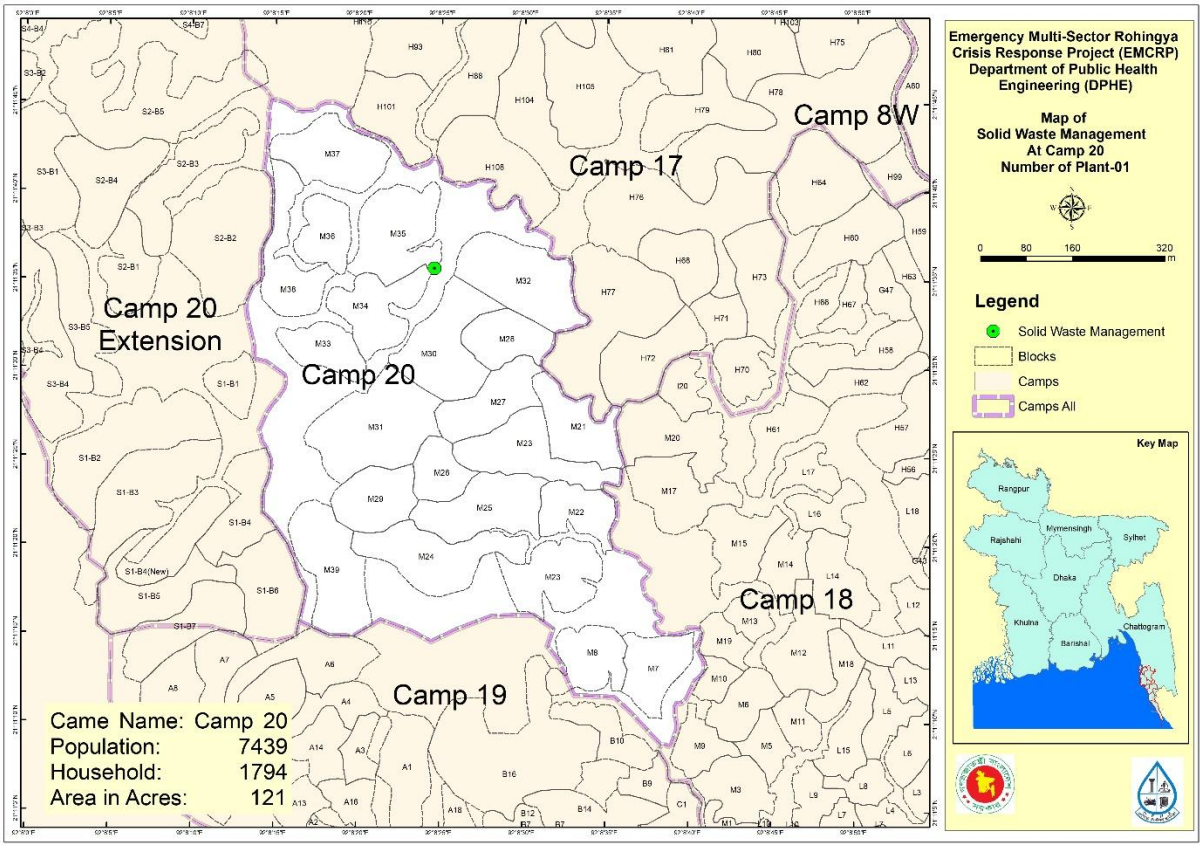

Map-01: Location of Proposed Box composting site at Camp20

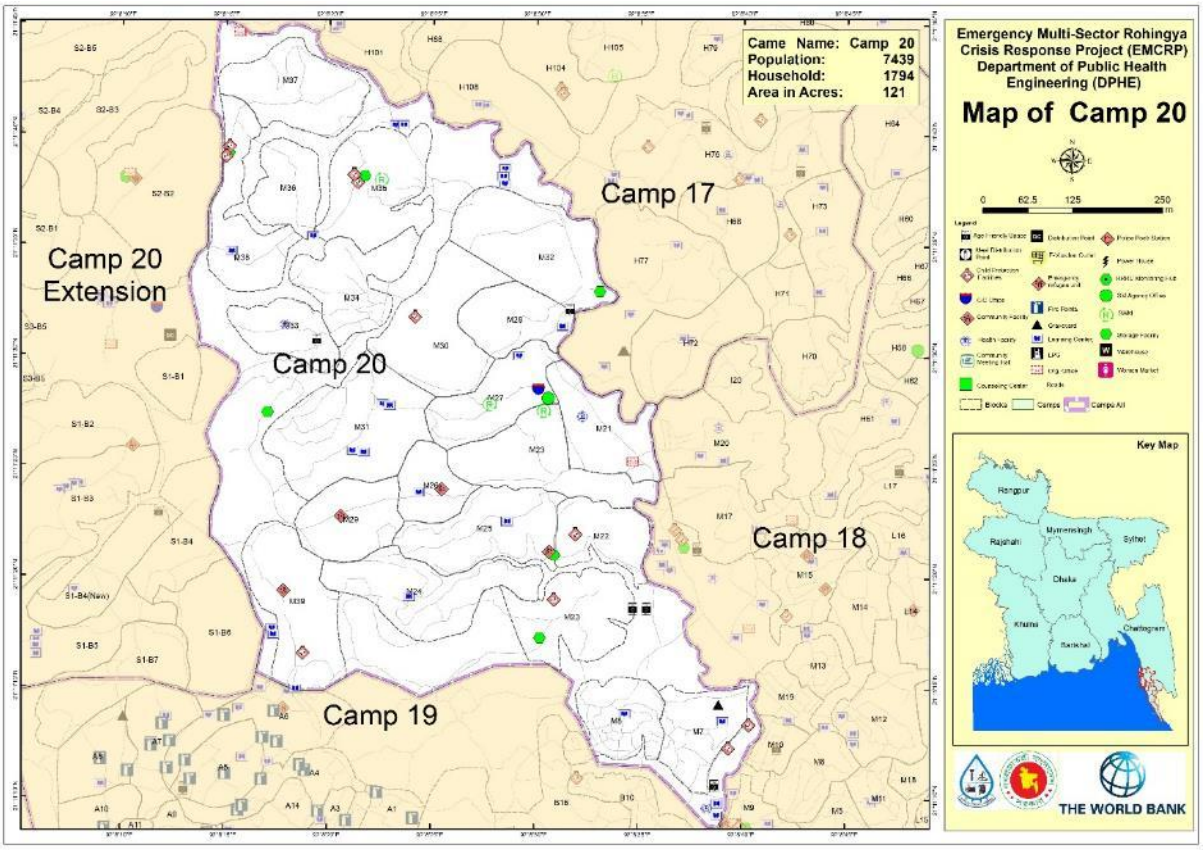

Map-02: Important features within DRP Camp20 area

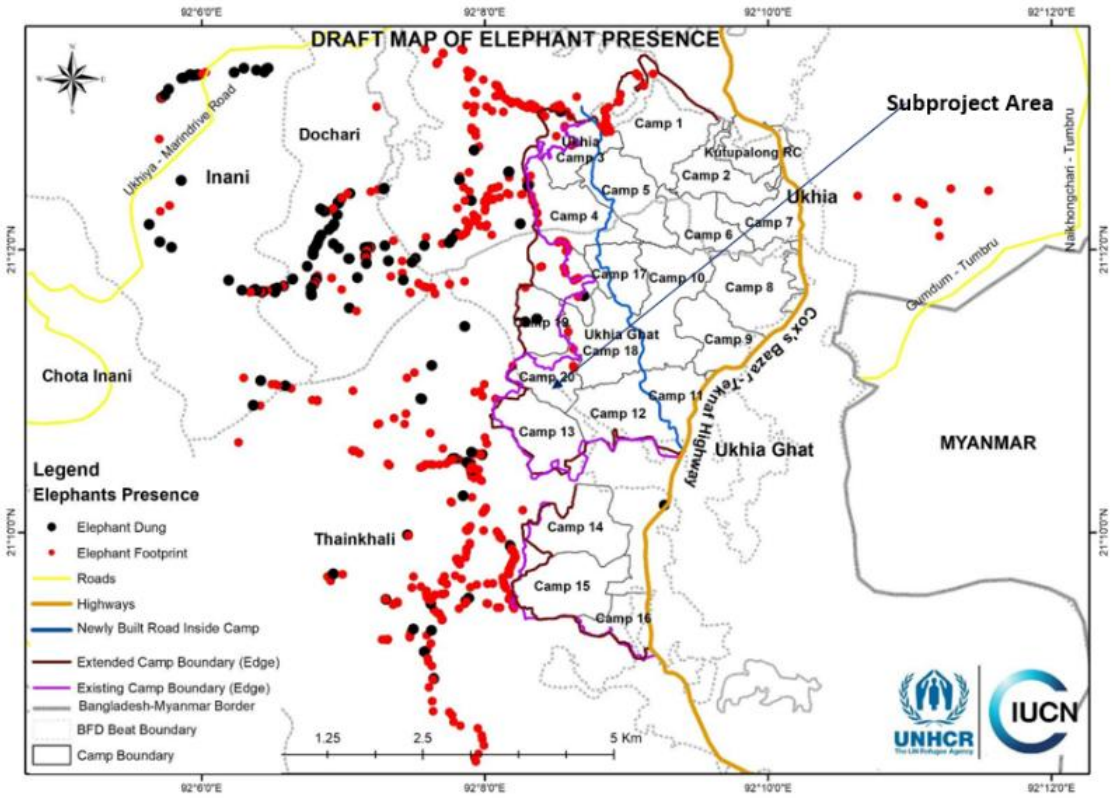

Map-03: Draft Map of Elephant Migration Road/ Presence around the Rohingya Camps

Environmental and Social Screening Form

Section A: Subproject Overview

Work Package: WD-08Supply, Installation and Construction with O & M of SWMS atCamp20.

Description of sub-project/component interventions: DPHE has decided to provide a SWM system under package EMCRP/ DPHE/WD-08 at Camp_20 with ensuring following accessibility: i. Development of collection system of solid waste (providing Buckets for Collection of Household Solid Waste) and construction of communal garbage bin with sock well & box composting system (for 5000 people) ii. Post Commissioning Operation & Maintenance work
Sub-project Location: Proposedbox composting system is located at Camp_20Block-M_35 and communal bins will be constructed at different locations of Camps at Palongkhali Union under UkhiyaUpazila of Cox's Bazar District. The proposed site for box composting unit isa plain vacant land.There is herringbone bond road close to the sub project area as well as footpath also exists.
Land ownership: Lands areowned by Government of Bangladesh.
Expected construction period: 12 (twelve) months.
Description of project intervention area and project influence area with schematic diagram *(where relevant, indicate distance to sensitive environmental areas such as elephant corridors, water bodies, etc. and historical or socio-cultural assets):* Adjacent of the scheme site under the sub-project intervention area: Camp_20 and Block-M_35. i. Impacted area: Approx. 300.00 square meter for thebox composting unit& 8 square meter for communal bin ii. No structures, trees and livelihood will be affected. iii. DRP shelter relocation will not be required. iv. Influence area: All construction work will be conducted within the proposed area, construction materials will be stored within the area, so during construction period project influence area will be the subproject construction area & construction materials carrying roads. During operation solid waste will be collected from different communal bins or bins from households. Organic solid waste will be composted at box composting site v. Without proper management surrounding water bodies& soil may pollute. So, during operation selected communal bin areas, solid waste carrying roads and surrounding water bodies will be within the SWM influence area. vi. Environmental sensitivity: Within the influence area of the sub-project no historical sites were identified. Elephant footprint was found within the

camp area (checked with local IUCN representative&camp Elephant Response Team),

Section B: Environmental Screening

B.1: Environmental feature of SWM location

Description of cultural properties *(if applicable, including distance from site)*: There is health post, mosque, meal distribution point, learning center, CiC office, fire point, age facility space, counseling center, community meeting hall, graveyard, child protection facility, community facility, SM agency office, distribution point and information center exist around 1 (one) kilometre surrounding of scheme area. No other sensitive cultural, archaeological or religious sites are there in the area.
Location of environmentally important and sensitive areas: Within the influence area of the sub-project no historical sites were identified. Elephant footprint was found within the camp area (checked with local IUCN representative&camp Elephant Response Team). But elephant migration route is adjacent to the camp area. So proper management is essential during operation. **(1) Within/near Elephant Migration Routes Yes/No*:** Elephant footprint was found within the camp area (checked with local IUCN representative&camp Elephant Response Team). So proper management is essential during operation. **(2) Potential impacts on remaining forests in/around camps *Yes/No*:*** **No**. There are no original forests in this area now. Afforestation works have been started and some plantation is ongoing by different organizations. **(3) Other issues:** No more mentionable issues raised.
Dust: Ambient air quality data was not readily available. In the proposed site the existing air quality is almost dust free except for few months in the dry season (November to March). **Noise:** Noise in the sub-project area is not a major concern based on the consultations. Noise is originating from communication among the DRP, service providers and relief distributors.
Baseline soil quality: Soil types are alluvial reddish brown, muddy & sandy soil and Dupitila formation. The soils developing from the weathered sandstones tend to be sandy to clay loams. Presence of organic matter content in the soil is moderate.

Landslide potential *(high/medium/low, with explanation)*:

Low: Potential erosion/land slide may occur when moderately to highly sloping earth excavation are disturbed for the construction of Solid waste box composting system. But for SWM this impact is low because maximum earth cutting depth is 1.6 m and this impact is very much site-specific, within a relatively small area and possible to easily mitigate by mitigation measures.

Baseline surface water and groundwater quality *(FE, TDS, fecal coliform, pH):*

Surface water quality: No surface water quality was checked during the screening report preparation. But before starting the construction work surface water quality beside the proposed SWM area will be tested by the contractor and during operation that data (surface water test result) will be used as baseline data.

Groundwater quality: Groundwater is the main source of potable water in the sub-project area. The shallow depth is about 100 feet and deep tube well depth is 500ft to 750ft. In the sub-project area, groundwater is saline and arsenic free. Shallow tube well of surrounding the sub-project area are iron concentration is little high. PH_7.5 to 8.50, DO_2.20 to 8.50mg/l, TDS_25.50 to 320 mg/l, EC_25 to 450 µs/cm, Fe_0.50 to1.5 mg/l, Mn_0.01 to 0.08 mg/l, Chloride_10 to 65 mg/l and As _ Nil to 0.001 mg/l. (Tube well depth: 500 ft. to 750 ft.). Many shallow tube wells have been installed in the camp area. This has resulted in excessive withdrawals of water from the shallow aquifer and a drying up of some of the wells.

Data source: Secondary data and field survey

Status of wildlife movement:

Within the influence area of the sub-project no historical sites were identified. No elephant footprint was found within the camp area (checked with local IUCN representative). But elephant migration route is adjacent to the camp area. So proper management is essential during operation. Elephant movement issue will be monitored by DPHE during

State of forestation:

To accommodate large numbers of DRP, the hills were cleared and forest cut indiscriminately and shelters have been set up on the hills. Steps have been cut into the slope to facilitate access to the shelters. Hill cutting loosens the soil and can result in soil erosion, sedimentation and siltation. Washing out of the valuable fertile top soil that will make the hills unsuitable for supporting any valuable vegetation cover. The eroded soil will also cause stream congestion, which might hinder stream flow, which in turn will result in habitat loss, water pollution and water scarcity. New plantations have been made by different organizations.

B.2: Pre construction Phase

Information on Ancillary *Facilities (e.g., status of access road or any other facility required for sub-project to be viable):*
There is a HBB road adjacent to the site. There is a natural canal adjacent to the site.
Requirement of accommodation or service amenities*(toilet, water supply, electricity)*to support the work force during construction:
During construction proper labor shed will be constructed with water supply toilet facilities. If there are women labor, proper lighting facilities should arrange, by using solar light, charger light, etc.
Possible location of labor camps: Within the proposed Box composting site.
Requirement and type of raw materials *(e.g., sand, stone, wood, etc.):*
i) Bricks, ii) Sand iii) Cement iv) PVC pipe v) reinforcement vi) filter sand for filter media vii) Water viii) Iron flat bar ix) roofing sheet for box composting site etc. are the most common type materials used in construction.
Identification of access road for transportation *(Yes/No):*
Yes.
Location identification for raw material storage:
Close to the proposed SWM construction area.
Type and quantity of waste generated *(e.g., Solids wastes, liquid wastes, etc.):*
None.
Approx. area *(in square meters)*of vegetation and soil in the right-of-way, borrow pits, waste dumps, and equipment yards:
No valuable vegetation presence in proposed sub-project construction site (approx. 300 square meter land per SWM).
Possibility of stagnant water bodies in borrow pits, quarries, etc., encouraging for mosquito breeding and other disease vectors: None. ***(High/Medium/Low with explanation)***

Disturbance or modification of existing drainage channels (rivers, canals) or surface water bodies (wetlands, marshes): (High/Medium/Low with description): **Low.** Beside the proposed land there is a natural canal. But during pre-construction phase impact is very low if construction materials will not store over within the canal.
Destruction or damage of terrestrial or aquatic ecosystems or endangered species directly or by induced development: (High/Medium/Low with description): **Low.** Under these scheme establishment interventions, the effect of destruction or damage of endangered species is negligible.
Activities that can lead to landslides, slumps, slips and other mass movements in road cuts: None
Describe possible traffic movement impacts on *(unwanted)* light, noise and air pollution: Because of construction materials transportation noise & air pollution may occur. But this impact is very low because during pre-construction stage construction materials transportation is very minimal.

High = Likely to cause long-term impacts or over large area (>1sqkm); Medium = Likely to cause temporary damage or over moderate area (0.5 to 1sqkm); Low = Likely to cause little, short-term damage and over small area (<0.5sqkm)

B.3: Construction Phase

Type and quantity of waste generated: *(e.g., Solids wastes, liquid wastes, etc.)* **Solid waste:** i) Bricks, ii) Sand iii) PVC pipes vi) Bamboo & wood and v) earth or mud vii) Iron flat bar viii) Steel Color Coated Industrial Roofing Sheet etc. It is difficult to give exact figures of construction waste produced on a solid waste box composting site construction site. Excavated mud will be reused for backfilling also. **Liquid waste:** None.
Type of raw materials used *(wood, bricks, cement, water, etc.):* i) Bricks, ii) Sand iii) Cement iv) PVC pipes v) reinforcement vi) gravel & filter sand for filter media vii) Water viii) Iron flat bar ix) roofing sheet for communal bin & x) box composting area etc. are the most common type materials used in construction.

Approx. area *(in square meters)* of vegetation and soil in the right-of-way, borrow pits, waste dumps, and equipment yards: Total area of box composting site is 300 sqm. No valuable vegetation presence in proposed sub-project construction sites. So, vegetation will not be affected by construction work. During construction work all construction materials will be stored within the proposed area.
Possibility of stagnant water bodies in borrow pits, quarries, etc., encouraging for mosquito breeding and other disease vectors: *(High/Medium/Low with description):* **Medium.** Earth excavation will be required for foundations & soak wells. Water stagnant may occur if the place keeps open for long time after earth excavation.
Disturbance or modification of existing drainage channels (rivers, canals) or surface water bodies (wetlands, marshes): *(High/Medium/Low with description):* **Medium.**There is a natural canal beside the proposed site. All construction work will be conducted within the proposed site. But, without proper management of construction waste, canal water may pollute by thronging construction waste.
Destruction or damage of terrestrial or aquatic ecosystems or endangered species directly or by induced development: *(High/Medium/Low with description):* **Medium.** There is a natural canal beside the proposed site. Waste from labor camp may fall into the canal. However, it would be minimal and time specific because contractor will dispose the generated waste into designated waste dump site regularly.
Activities that can lead to landslides, slumps, slips and other mass movements in road cuts: None.
Erosion of lands: *(High/Medium/Low with description):* **Low.** Potential erosion/land slide may occur when moderately to highly sloping excavation are disturbed for the construction work. But for SWM this impact is low because maximum earth cutting depth is 1.6 m (for maturation pond/tank) and this impact is very much site-specific and possible to easily mitigate by mitigation measures.
Describe possible traffic movement impacts on *(unwanted)* light, noise and air pollution: No traffic movement impacts on light as all vehicular movement will be during day time. Some temporary, localized effects of noise and air pollution can occur due to truck movements.

High = Likely to cause long-term impacts or over large area (>1sqkm); Medium = Likely to cause temporary damage or over moderate area (0.5 to 1sqkm); Low = Likely to cause little, short-term damage and over small area (<0.5sqkm)

B.4: Operation Phase

Activities leading to health hazards: In Operation phase of SWM system, improper use of personal protective equipment (PPE) and lack of safety procedures may cause injuries. During solid waste collection it may cause health hazard (without proper management) to the DRP community. DPHE will engage one maintenance engineer (for 7 SWMS), six cleaning staff (for each SWMS) & 3 drivers (for 3 dump truck) during operation & maintenance period of SWMS. DPHE will trained up those O &M staffs properly before operation of SWMS.
Chance of long-term or semi-permanent destruction of soils: ***(High/Medium/Low with description):*** **Medium.** Medium chance of long-term or semi-permanent destruction of soils at composting area
Possibility of odor and water, soil quality impacts from SWM disposal system: **(High/Medium/Low with description):** **Medium.** Solid waste will be collected from different bins of the DRP camp for the box composting plant. Sold waste will be collected by using covered truck or van. Labours should use proper PPEs like hand gloves, safety boots, face masks, eye protecting glasses, etc. In cases of leakages, the leachate will percolate into the ground and may find its way into existing groundwater resources. At SWM site regular maintanece & proper management will be required (detail within ESMP, ***Appendix 01***)
Possibility of stagnant water, etc., encouraging for mosquito breeding and other disease vectors: **(High/Medium/Low with explanation):** **Medium.** Without proper management it may cause stagnant of water and may encourage mosquito breeding. Without proper management it may cause health hazard to the DRP community peoples.
Likely direct and indirect impacts on economic development in the project areas by the sub-project: SWM will be helpful of the DRP and improve surrounding environment.
Extent of disturbance or modification of existing drainage channels (rivers, canals) or surface water bodies (wetlands, marshes): **(High/Medium/Low with description):** **Medium.** Improper management of solid waste may affect drain (canal) beside the proposed box composting site. If leachate fall within canal, it will pollute canal water.

Extent of destruction or damage of terrestrial or aquatic ecosystem so endangered species directly or by induced development: *(High/Medium/Low with description):*   **Medium.** Improper management of the SWM system may cause water pollution. Unplanned dumping of solid waste may cause damage of terrestrial or aquatic ecosystem.
Activities leading to landslides, slumps, slips and other mass movements inroad cuts: N/A
Erosion of lands: None
Describe possible traffic movement impacts on *(unwanted)* light, noise and air pollution: Temporary, localized impacts on noise and air pollution from maintenance vehicles movement can occur during SWM maintenance work. All maintenance works will be conducted during daytime – so no light impacts expected.

High = Likely to cause long-term impacts or over large area (>1sqkm); Medium = Likely to cause temporary damage or over moderate area (0.5 to 1sqkm); Low = Likely to cause little, short-term damage and over small area (<0.5sqkm)

Section C: Social Screening

C.1 General Labor Influx Screening

Key Screening questions	Aspects to Consider
Will the project potentially involve an influx of workers to the project location, and will the influx be considered significant for the local community?	The number of total skilled mason are 6 and unskilled labor 10 person will be required for each SWM. All the unskilled labor will be engaged from the DRP community. All the skilled labor will be staying at labor shed within the camp. The size of the labor shed (If there is women labor need to have separate shed and toilet) will be 225 square feet.
Is the project located in a rural or remote area?	The project area is in a camp area demarcated by the Government and belongs to Camp 20. in a remote specialized area. The total camp population is 7439. The frequency and extent of the contract, communication between the local community and outsiders are limited, and controlled by the respective authority. After establishing the proposed per SWM schemes in the area about 10,000 peoples will be benefitted.
Based on the socioeconomic, cultural, religious and demographic qualities of the local community, Rohingya population and the incoming workers, is there a possibility that their presence or interaction with the local community could create adverse impacts?	No. It is not expected that the presence of the skilled (local) and unskilled labor (DRP) may generate any adverse impacts. The project will benefit the DRP communities. There will be a code of conduct for the labors to follow, which will be monitored by the PMU on a regular basis. Before starting construction, work consultation will be conducted with construction labors & they will be given orientation on GBV issue. GBV, trafficking, child labour issue, labour influx, etc. will be monitored & monitoring progress will be incorporated within monthly progress report.
Consultation with DRP Community People and relevant stakeholders (SH)	During screening and site identification DPHE has conducted one consultation meeting(Total participants: 14; Female: 00, Male: 14, Transgender: 00) DRP community. Some consultations were conducted with primary and secondary stakeholders. The stakeholders include CiC, WASH Sector, Site Management Committee representatives, Contractor team and DRP Community. In addition to the above-mentioned meetings, the local DPHE has undertaken many consultations with male and female members of the DRP. Through the coordination and linkage activities of the project, the authorities have accomplished some formal exchange meetings, individual household visits, FGD, Tea Stall discussion and other consultation meetings.

C.2 Land acquisition and stakeholder screening

Probable Involuntary Resettlement Effects	Yes	No	Not Known	Remarks
Involuntary Acquisition of Land/ Land Donation/ Land Taking				
1. Will there be any land acquisition?		√		Land acquisition is not needed.
2. Is the project construction site known?	√			The land is selected based on needs of DRP community with the recommendation of CiC, SMC & Local DPHE and assigned UN agencies
3. Who manages the land?	√			The lands are solely owned by the GOB and currently vacant.
4. Will easement be utilized within an existing Right of Way (ROW)? CRP (Common Resource Property)	√			In the camp area Provision is available be utilized within an existing vacant land within this Camp 20 under EMCRP.
5. Will there be loss of DRP tent, agricultural carps, trees, and other productive or fixed assets due to project intervention?		√		No DRP shelters will be affected. However, during construction if any shelters require to shift, mitigation measures will be taken according to RPF. Consultations will be conducted with stakeholders, camp and block focal persons, and site management. During construction, if any shelters are affected, contractors are responsible to mitigate the impacts following the RPF as well.
6. Will there be loss of businesses or enterprises due to project intervention?		√		No
7. Will there be loss of income sources and means of livelihoods due to project		√		No

intervention?				
Involuntary restrictions on land use or on access to legally design ate parks and protected areas				
8. Will people lose access to natural resources, communal facilities and services?		√		No
Information on Displaced Persons:				
9. Any estimate of the likely number of persons that will be displaced by the Project?[√]No [ ] Yes ***If yes, approximately how many?***				
10. Are any of them poor, female-heads of households, or vulnerable to poverty risks?[√]No[]Yes				
11. Are any displaced persons from indigenous or ethnic minority groups?[√]No []Yes				
12. Who are the stakeholders of the project? Please provide a summary of consultation meetings with stakeholders and the affected community. The key stakeholders of this sub-project are DRP, Labors, people/communities/organizations within the project influence area indirectly affected by project activities, relevant government departments/agencies, Development Partners (WASH Cluster, UNHCR, IOM, OXFAM, BRAC) and local and international NGOs working with local host communities/DRP. For determining the environmental and social impacts associated with subproject implementation, DPHE, PMU unit give great importance on involving primary and secondary stakeholders of the subproject area. Therefore, to collect local knowledge for baseline conditions, understand perceptions of the community regarding impact significance, and propose meaningful mitigation measures during survey of Environmental Screening, an attempt has been made to consult with relevant stakeholders and DPHE officials to obtain their views on subproject interventions. Under the screening process two (02) Community consultation were conducted through a mix of conventional approach which involved as participatory, community consultations (FGD) and one-to one interview, during the environmental and social study of the proposed subproject in conformity with the Project environmental guidelines. However, for better understanding the socio-economic and environmental condition one consultations with DRP community have been conducted in the subproject study area **(*Appendix-01*).** The community consultations were conducted with the following objectives: (i) to intrude awareness of the stakeholders about the subproject and to collect their opinion, suggestions for planning and site selection (ii) to identify the need and concern of the DRP public, (iii) to assess cultural patterns				

and behavior of local communities. Stakeholder consultation was targeted at people/communities who may – directly or indirectly, positively or negatively- be affected by the outcomes of a subproject. The consultations were conducted at two different tiers of stakeholders: DRP people and different organization representative who are concern about the subproject. All of the proceedings and interaction of consultation and FGD have been recorded and are to be considered in the design of ESMF. In addition, attended list of participants of consultation meeting recorded and it's been attached in ***Appendix-03*.**

Individual level consultation with project interest and influence parties (CiC, Camp Wash focal team) representative were conducted in consistence with consultation objective during subproject selection stage to have their idea, concern, segregation about the proposed subproject. Consultation outcome with them is consolidated here in below:

Feedback, Suggestions, and Recommendations of the Participants FGD

The participants' feedback, suggestions, and recommendations listed below:

- During consultation it was found that Solid waste management is a big problem for the community. ESS team have explain the importance of the SWM system to the community
- During the consultation, the ESS team explained to them about the 'waste' collection system during operation. They have exposed concern over bad smell and the nuisance of mosquitoes & flies.
- They requested for regular maintenance of communal bins. Participants showed highly anxious about its operation and maintenance. In this regard, they suggested to confirm who will take responsibilities for operation and maintenance.
- They also expressed their concern about employment opportunities. They said that, if possible, non-skilled worker should engage from DRP community so that they can manage their livelihood.
- During construction work they also request to maintain proper safety measures. Since communal bins will be placed beside DRP household area, so excavated portion should not keep open for long time.

Responds of CiC/Site Management:

- Always try to coordinate with related authority/group and give updates to CiC;
- CiC is ready to support DPHE, if they face any obstacle to implement the scheme;
- After confirmation of site for schemes with the assistance of CiC and other related organization, site should be confined to avoid the neighboring disturbance
- After site section then try to keep boundary of the scheme areas and hang a signboard as soon as possible including name of executing agency, types of intervention, address of contractor, project duration, funding agency name and so on.
- Regular maintenance & monitoring of SWM will be essential

- Engage the DRP/Local community to implement the sub-project

13. What social and cultural factors affect the ability of stakeholders to participate or benefit from the proposed policy or project?

None.

14. Are project objectives consistent with their needs, interests and capacity?

Yes, the EMCRP project objectives consistent with the respective stakeholders, DRP and host community, needs, interests and capacity in theproject areas.

15. What will be the impact of the project or sub-project?

Positive:

During Construction: The construction works will require skilled and unskilled labors. Wages will temporarily increase family income and boost the local economy. Some labors will learn from the construction works and improve their skills.

Main positive impacts of the intervention are:

- Decomposed solid waste from box composting site will be used as fertilize
- Improved quality of health from proper management of solid waste that would otherwise be dumpedhaphazardly and ultimately drained into streams rivers where others may become in contact.
- Improved water quality in stagnant water bodies, streams and rivers.
- Some employment opportunities benefitting neighboring communities. This will boost householdincome and improve living standards of those concerned.
- Properly composted solid waste will be used as fertilizer for agricultural productivity.
- Open burning of solid waste will be reduced.
- Source segregation of organic & inorganic waste (at communal bin) will enhance the environment.

Negative Impacts:

- **Pollution to the nearby water sources / channels-** Without proper management, there may be pollution of soil, surface water and groundwater sources. Failureof properly working may also cause significant impact to nearby water bodies.
- **Foul smell-** Without proper maintenance SWM may cause foul smell during operation
- **Mosquito breeding-** The leachate caring drain & storage tank may form a suitable breedingground for mosquitos and disease.

- **Overflowing of waste into the surrounding environment-** Poor management of proposeddevelopment may result to leachate overflowing, which may find its way to agricultural fields, water sources or roads. This may lead to the spreading of waterborne diseasessuch as cholera or impact fauna and flora.

16. What social risks might affect project or sub-project success?

As per the visit findings and consultation meeting with DRP community, other organizations and representatives of the scheme area, it has been revealed and perceived that the following social risks might be affected to accomplish the scheme interventions:

Since the skilled labor will be engaged from the host community and unskilled laborers will be engaged from the DRP, there may be some conflict between the two groups. To establish the scheme tasks, labor from outside such as technicians will be engaged. Thus, there may be risk of some social conflict. A complete Gender action plan has already been developed and approved, a full time Gender Specialist for this project has been assigned to oversee the GBV based issues for this subproject. The gender and GBV issues (i.e., human trafficking, eve teasing, etc.) are being addressed through mainstreaming activities. As a mitigation measure, the Social Safeguard team and grievance redress committee (GRC) has been formed following the respective GRM, is keeping abreast on GBV occurrences and will guide the community through consultation meetings and counseling. Given the sensitivities in the camps areas (social, cultural, religious, gender, disabilities, orphaned and vulnerable children, relationship with DRP and host community), if the site area will be used as the open play space for the DRP kids, it might hamper their movement and play time for the time being. Unexpected noise, dust pollution, waste materials due to scheme establishment activities, might affect general social, religious activity of the DRP community at site area. However, by adopting the project E&S safeguard and through community consultation, the CiC, community leader and local DPHE representatives may determine possible ways and options to overcome and mitigate the constraints and risks during the scheme implementation.

C.3. Social Capital Format

The objective is to list various types of social institutes/bodies working in the camp, intended project influence areas to enlist them for the possible inclusion in the management, and monitoring of the projects. List the name of social institutes/ bodies under the given categorization along with the following information. Use separate sheet for each category of social institute/body. The information can be collected through secondary sources such as RRRC/UN agencies or different development organizations that are involved with the Rohingya crisis projects, etc.

Type of Social Institutes/bodies	Name of Institution	Contact Person and Address and phone number	Primary areas of Work	Coverage areas in the camp and communities
Government Organizations	RRRC, DPHE, DC DRP CIC	Mr. Shah Rezwan Hayat, RRRC Commissioner, CXB, Email :rrccox@yahoo.com …… Engr. Ritthick Chowdhury, DPHE, Executive Engineer, CXB, Email. chowritthick@gmail.com …… Md. Mamunur Rashid dccoxsbazar@mopa.gov.bd …… Mr. Sarwar Kamal Camp-in-Charge, Camp20.(Deputy Secretary) camp20@rrrc.gov.bd	Overall Coordination of GOB dept., Dev. partners, NGO, INGIO, UN Agencies, Volunteers, Management of DRP Crisis in BD. Refugee Relief and Repatriation, Site management, Ensuring DRP HH shelter, F/NFIs, WASH facilities,Education,Health,Livelihoods, Social security, power sources, renewable solar energy.	DRP Camps, Block, synchronizing with Host,E&S aspects, Elephant corridors, conserve NR. Establish proper road communication.
UN Agencies /INGOs	WSC IOM, UNICEF, WFP, FAO, UNHCR UNFPA	Akter Hosen SAMU, Focal Person, Area Focal Agency, IMO ahsamu@iom.int Ashfaqur Rahman (Sojib) Focal Person, Camp Focal Agency, WASH, IMO. marahman@iom.int	Management of DRP Crisis in BD. Refugee Relief and Repatriation, Site management, Ensuring DRP HH shelter, F/NFIs, WASH facilities, Education, Health, Livelihoods, Social security, power sources, renewable solar energy	DRP Camps, Block, synchronizing with Host, E&S aspects, Elephant corridors, conserve NR. Establish proper road communication.
National Organizations	Not yet on boarded	the database web link https://www.humanitarianresponse.info/en/		

Type of Social Institutes/bodies	Name of Institution	Contact Person and Address and phone number	Primary areas of Work	Coverage areas in the camp and communities
		operations/bangladesh/document/wash-sector-coxs-bazar-members-contact-list-17-october-2017		
Community based Volunteer Organizations are those, which constitute the members of the community working towards social development.	Not yet involved	N/A. Prohibited by the GoB.	Ensuring DRP HH shelter, F/NFIs, WASH facilities, Education, Health, Livelihoods, Social security, power sources, renewable solar energy.	

Section D: Environmental and Social Screening Summary

Environmental Screening Summary:

Based on the above environmental and social screening, potential impact for implementing the proposed intervention on different parameters of environment and social with consequence mitigation measures and suggestive monitoring plan with mentioning the responsibilities parties of implementation and supervise the subproject project have been summarized in below.

Section	Main Environmental and Social Impacts	Impact Significance	Suggested Mitigation Measures	Person/ Institution Responsible	Monitoring Suggestions	
					Indicators	Frequency
1:Sub-Project Interventions	**Air Quality**	Under the subproject intervention the overall score is **low**.	• Limiting earthworks; • Watering of dry exposed surfaces and stockpiles of aggregates at least twice daily, as necessary; (spreading of crushed gravel over backfilled surfaces; • Work place isolated by fencing active work sites in populated areas. • Limiting speed of construction vehicles in access roads and work sites to maximum of 20 kph. • More details provided in ESMP	Construction Contractor monitored by Environmental Consultant and PMU	• Location of stockpiles; • Number of complaints from stakeholders; Covering of trucks; • Records of air quality inspection;	Regular monitoring will be required
	Soil	Under the sub-project intervention, the overall score is	• Leachate collection system shall be fully operative to prevent the contamination of the ground water of the area. Proper	Construction Contractor monitored by Environmental	• No visible degradation to nearby drainages, • Khals or water	Weekly, especially after rain events Special

Section	Main Environmental and Social Impacts	Impact Significance	Suggested Mitigation Measures	Person/ Institution Responsible	Monitoring Suggestions	
					Indicators	Frequency
		Medium during operation phase, but during construction score is **Low.**	leachate collection system is provided within detail design (Drain & storage tank). Regular cleaning & maintenance of leachate carrying drain will be essential. Leachate storage tank is already provided within detail design • For communal bin proper sock well is provided, regular maintenance of those sock wells (communal bin) will be essential. • To protect communal bins & box composting system from heavy rainfall, proper shade should provide to protect communal bins & box composting system from rainfall. Within design shade is provided for box composting system. Shade for communal bins should also provide. Regular maintenance of shades will be essential • Regular checking for functioning of leachate collection and disposal system. • The earthwork sites where	Consultant and DPHE	bodies due to soil erosion. • Rain storms in construction phase.	monitoring will be required during construction & operation

Section	Main Environmental and Social Impacts	Impact Significance	Suggested Mitigation Measures	Person/ Institution Responsible	Monitoring Suggestions	
					Indicators	Frequency
			exposed land surface is vulnerable to runoff shall be consolidated and/or covered. • Channels, earth bunds, netting, tarpaulin and or sand bag barriers shall be used on site to manage surface water runoff and minimize erosion. • The overall slope of the works areas and construction yards shall be kept to a minimum to reduce the erosive potential of surface water flows elsewhere.			
	Hydrology (surface and groundwater)	Under the sub-project intervention, the overall score is **low** during construction. But during operation score is **Medium**.	• Leachate collection system shall be fully operative to prevent the contamination of the ground water of the area. Proper leachate collection system is provided within detail design (Drain & storage tank). Regular cleaning & maintenance of leachate carrying drain will be essential. Leachate storage tank is already provided within detail design. • For communal bin proper sock	Construction Contractor and monitored by Environmental Consultant and PMU	• Waste collection points & treatment plant area. • Areas for stockpiles, storage of fuels and lubricants and waste materials; • No visible degradation to nearby drainages, khals or water bodies due to	• Water quality test (SW & GW) once in construction period and regular monitoring during Operation period. • Training records

Section	Main Environmental and Social Impacts	Impact Significance	Suggested Mitigation Measures	Person/ Institution Responsible	Monitoring Suggestions	
					Indicators	Frequency
			well is provided, regular maintenance of those sock wells (communal bin) will be essential. • To protect communal bins & box composting system from heavy rainfall, proper shade should provide to protect communal bins & box composting system from rainfall. Within design shade is provided for box composting system. Shade for communal bins should also provide. Regular maintenance of shades will be essential • Regular checking for functioning of leachate collection and disposal system. • All precautions to store chemicals/oil/fuel properly so that no chance of spill. • Proper disposal of excess bleaching power and care should be taken to follow the appropriate procedure for chlorination. • Monitor water quality according		construction activities. • For surface water quality parameters:pH, DO, BOD, COD, TC, FC • For groundwater quality parameters: pH, Chloride, As, Fe, TC, FC • Training records	reviewed quarterly

Section	Main Environmental and Social Impacts	Impact Significance	Suggested Mitigation Measures	Person/ Institution Responsible	Monitoring Suggestions	
					Indicators	Frequency
			to the environmental management plan. • Ensure drilling equipment is cleaned well and will be free of contaminants such as grease, and chemicals, prior to drilling; and properly dispose of spoils and wastes at the end of each day's work.			
2: Pre-construction Phase	**Impact on Existing drainage: drain may block, due to storage of construction materials on or next to the drain.**	Under the sub-project intervention, the overall score is **low**	• The Contractor will not be allowed to store construction materials beside drains • Regular monitoring is essential • If any materials fall within the drain, contractor will clean the drain immediately.	Contractor and monitored by Environmental Consultant and PMU	• List of materials and sources of materials; • Storage site away from the drain	Weekly
	Storage of construction materials can cause pollution or	Under the sub-project intervention, the overall score is **low.**	• Train the concerned person, team assigned for the construction work regarding proper storage procedures: away from steep slopes, proper bonding to avoid runoff from site.	Contractor and monitored by Environmental Consultant	• List of materials and sources of materials; • Storage site away from steep slopes and has proper	Weekly

Section	Main Environmental and Social Impacts	Impact Significance	Suggested Mitigation Measures	Person/ Institution Responsible	Monitoring Suggestions	
					Indicators	Frequency
	land slips			and PMU	bonding	
	Transportation impacts	Under the sub-project intervention, the overall score is **low.**	• All vehicle movement to be done during the day time • Speed needs to be limited to 20kmph • Contractor's responsibility to verify the suitability carrying, loading and unloading of materials by trucks or others transport and head load arrangement.	Construction Contractor and monitored by Environmental Consultant and PMU	• Check the vehicle pool. • Record of regular inspection. • Record of accidents/incidents	During carrying of construction materials
3: Construction Phase	**Construction Waste (excavated soil etc.)**	Under the sub-project intervention, the overall score is **Low.**	• Wastes must be placed in the designated bins which must be regularly emptied. • All waste must be removed from the site and transported to a disposal site.	Contractor and monitored by Environmental Consultant and PMU	• Complaints from community; • Regular inspection of waste management activity; • Waste disposal record.	As work weekly progresses
	Stagnant water risk	Earth excavation will be required for pit placement. Water stagnant	• Water stagnant area should fence with marking tape • The top soils in the sub-project are sandy and the water should	Construction Contractor foreman and monitored by	• Water stagnant beside SWM area	Daily during construction

Section	Main Environmental and Social Impacts	Impact Significance	Suggested Mitigation Measures	Person/ Institution Responsible	Monitoring Suggestions	
					Indicators	Frequency
		may occurs if the place keeps open for long time after earth excavation. **Medium.**	drain away quickly • Contractor should arranger proper water facilities (pup, etc.) • Proper PPEs are essential during construction work.	Consultant and PMU		
	Storage of materials (Creating dust/ air pollution spillage of liquid/ hazardous substance i.e. oil, drilling fluid, chemicals etc., Risk of crime)	Under the sub-project intervention, the overall score is **Low.**	• By the site management committee in Camp to identify the storage site and other requirements, which will be approved by PMU and consultants.	Contractor and monitored by Environmental Consultant and PMU	• List of materials and sources of materials;	Monthly basis during implementation phase.
	Impact on Drain & Aquatic Environment by discharging solid & liquid wastes from construction site& labor	Under the sub-project intervention, the overall score is **Medium.**	• Generated waste and construction debris shall be properly disposed in accordance with the approved designated disposal site(s); • Acceptable quality of excavated soil shall be mostly reused for the backfilling, with the surplus portion, if any, disposed in the	Contractor and monitored by Environmental Consultant and PMU	• Frequency of emptying the waste bin • Existence of waste bin	Monthly basis during implementation phase.

Section	Main Environmental and Social Impacts	Impact Significance	Suggested Mitigation Measures	Person/ Institution Responsible	Monitoring Suggestions	
					Indicators	Frequency
	camp into nearby canal water		approved designated disposal site(s). • Separate waste collection bins, for organic and inorganic wastes, shall be provided throughout the construction and camp sites, whereby all waste collection bins shall be regularly emptied and cleaned; • Contractor will be responsible to control the workers from discharging of construction waste into adjacent water bodies.			
	Erosion of land	Under the sub-project intervention, the overall score is **Low.**	• During construction work (especially for earth excavation) proper slope protection is essential. • During backfilling work proper compaction is essential (as per specification) • Avoid earthwork during monsoon • Proper PPEs are essential during construction work	Construction Contractor foreman and monitored by Consultant and PMU	• No visible degradation to nearby drainages or water bodies due to soil erosion at/near sub-project site.	Daily during earth excavation work & work below GL
	Noise	Under the	• Consultation with affected	Construction	• Number of	Inspection by

Section	Main Environmental and Social Impacts	Impact Significance	Suggested Mitigation Measures	Person/ Institution Responsible	Monitoring Suggestions	
					Indicators	Frequency
	pollution	subproject intervention the overall score is **Low.**	people; not to operate noisy equipment during working and operations time (22:00 – 06:00); • Sound suppression for equipment; • Ear protection for workers. • Conduct noise quality monitoring as per direction • Limiting speed of construction vehicles in access roads and work sites to maximum of 20 kph. • Transportation of the construction materials and noisy construction work have to be carried during the scheduled times, and mainly during the day	Contractor and monitored by Consultant and PMU	complaints from stakeholders; Use of silencers in noise-producing equipment and sound barriers; • Noise Level following decibel meter (dB)	PMU and supervision consultants on monthly basis;
	Air pollution	Under the sub-project intervention, the overall score is **low.**	• Water spraying from other source for dust control; • Construction materials with potential for significant dust generation shall be covered; no smoke emitting equipment; and limiting speed of construction vehicles in access roads and work sites to maximum of 20	Construction Contractor and monitored by Environmental Consultant and PMU	• Location of stockpiles; • Number of complaints from stakeholders; • Records of air quality inspection; Air quality test	Visual monitoring during construction

Section	Main Environmental and Social Impacts	Impact Significance	Suggested Mitigation Measures	Person/ Institution Responsible	Monitoring Suggestions	
					Indicators	Frequency
			kph.		report.	
4: Operational Phase	**Health & Safety Hazard**	In Operation phase, improper use of personal protective equipment (PPE) and lack of safety procedures may cause injuries. During solid waste collection it may cause health hazard (without propped management) to the DRP community. overall score is **Medium.**	• Regular checking of the adequacy of the facility, particularly when composting chambers & bins are full and during the rainy season. • Ensure proper training given to all staff • Ensure PPE used by all staff • During solid waste collection, waste should not keep on open space, waste should collect with covered truck or van & should transport directly to the box composting site. • DPHE will engage one maintenance engineer (for 7 SWMS), six cleaning staff (for each SWMS) & 3 drivers (for 3 dump truck) during operation & maintenance period of SWMS. DPHE will trained up those O &M staffs properly before operation of SWMS.	Camp WASH NGO staff DPHE XEN	• Accidents register	Regular monitoring During operation
	Destruction of	During operation	• Leachate collection system shall	Construction	• No visible degradation to	Regular monitoring

Section	Main Environmental and Social Impacts	Impact Significance	Suggested Mitigation Measures	Person/ Institution Responsible	Monitoring Suggestions	
					Indicators	Frequency
	soil	period soil may pollute at collection points & at composting and overall score is **Medium.**	be fully operative to prevent the contamination of the ground water of the area. Proper leachate collection system is provided within detail design (Drain & storage tank). Regular cleaning & maintenance of leachate carrying drain will be essential. Leachate storage tank is already provided within detail design • For communal bin proper sock well is provided, regular maintenance of those sock wells (communal bin) will be essential. • To protect communal bins & box composting system from heavy rainfall, proper shade should provide to protect communal bins & box composting system from rainfall. Within design shade is provided for box composting system. Shade for communal bins should also provide. Regular maintenance of shades will be essential • Regular checking for functioning of leachate collection and	Contractor up to O&M period, Consultant and PMU Long-term responsibility to be determined by CIC/DPHE	nearby drainages or water bodies due to soil damage at operation period	During operation

Section	Main Environmental and Social Impacts	Impact Significance	Suggested Mitigation Measures	Person/ Institution Responsible	Monitoring Suggestions	
					Indicators	Frequency
			disposal system.			
	Odor and Impacts on Air Quality	Objectionable odor is expected at communal bins & box composting sites depending on various factors. Some of which are the types of wastes being handled, humidity, temperature and moisture content, among others. overall score is **Medium**.	• Best management practices and good housekeeping measures will be implemented to minimize the release of objectionable odors. • Regular cleaning of communal bins will be essential. • Since decomposition of solid waste will be done in aerobic condition, so it is possible to reduce generation of odor with proper management.	Construction Contractor up to O&M period, Consultant and PMU Long-term responsibility to be determined by CIC/DPHE	• Complaints from communities • Water stagent beside SWM area	Regular monitoring During operation
	Impact on existing drainage & Aquatic Environment	Improper collection system & improper management of leachate may cause pollution of drainage water & aquatic environment. Aquatic environment may also pollute by discharging leachate	• During solid waste collection, waste should not keep on open space, waste should collect with covered truck or van & should transport directly to the box composting site site. • Leachate collection system shall be fully operative to prevent the contamination of the drain water of the area. Proper leachate	Construction Contractor upto O&M period, Consultant and PMU Long-term responsibility to be determined by CIC/DPHE	• Survival rate of nearby aquatic animal; • Recorded any incident on aquatic animal • Recorded complaint if any • Regulat test of discharged water	Regular monitoring During operation

Section	Main Environmental and Social Impacts	Impact Significance	Suggested Mitigation Measures	Person/ Institution Responsible	Monitoring Suggestions	
					Indicators	Frequency
		and overall score is **Medium**.	collection system is provided within detail design (Drain & storage tank). Regular cleaning & maintenance of leachate carrying drain will be essential. Leachate storage tank is already provided within detail design • For communal bin proper sock well is provided, regular maintenance of those sock wells (communal bin) will be essential. • To protect communal bins & box composting system from heavy rainfall, proper shade should provide to protect communal bins & box composting system from rainfall. Within design shade is provided for box composting system. Shade for communal bins should also provide. Regular maintenance of shades will be essential • Regular checking for functioning of leachate collection and disposal system.			
	Injuries to	Site staff can be	• Ensure proper training given to	• Camp	• Accidents register	During emptying

Section	Main Environmental and Social Impacts	Impact Significance	Suggested Mitigation Measures	Person/ Institution Responsible	Monitoring Suggestions	
					Indicators	Frequency
	operation and maintenance workers (during maintenance work) & DRP community from fire hazard	seriously hurt by accidents. **Medium**	all staff & DRP community • Regular maintanence of biogas plant, gas supply line, gas burners are essential • Ensur fire Extingusher for each site. Fire Extingusher (5 liter capacty of C02 tyoe) is alreadincorporated within the tander document. Regular maintenance of the Fire Extingusher will be essencial. • Ensure PPE used by all staff	WASH NGO staff • DPHE XEN		collection buckets, communal garbage bin and Unloading in Box composting unit.
	Leachate Management	Since the composting system of the SWM will be covered with shade so leachate production from the system will be very minimum. But without proper management it may cause pollution and overall score is **Low**	• Leachate collection system shall be fully operative to prevent the contamination of the drain water of the area. Proper leachate collection system is provided within detail design (Drain & storage tank). Regular cleaning & maintenance of leachate carrying drain will be essential. Leachate storage tank is already provided within detail design • During dry season leachate may use as reagent for composting (Source: ITN-BUET)	Construction Contractor up to O&M period, Consultant and PMU Long-term responsibility to be determined by CIC/DPHE	Leachate volume within the tank	During Maintenance work

Section	Main Environmental and Social Impacts	Impact Significance	Suggested Mitigation Measures	Person/ Institution Responsible	Monitoring Suggestions	
					Indicators	Frequency
			• When the leachate tank will be filled, then leachate can be taken to dumping site and that shall be engraved in the earthen pit & soil cover shall be ensured at least one foot.			
	Noise pollution	Under the subproject intervention the overall score is **Low**	• Limiting speed of maintenance vehicles in access roads and work sites to maximum of 20 kph. • Transportation of the solid waste & other liquid waste have to be carried during the scheduled times, and mainly during the day	Construction Contractor up to O&M period, Consultant and PMU Long-term responsibility to be determined by CIC/DPHE	Noise from maintenance vehicle	During Maintenance work

**** Overall Impact Score: High = Likely to cause long-term E&S impacts; Medium = Likely to cause temporary impacts; Low = Likely to cause little, short-term impacts***

Social Screening Summary:

To furnish the details of social screening, the ESMF has been followed focusing on major social impacts and significance of the sub-projects (Equity, labor influx, population coverage, easy access, GBV), impact mitigation measures, referral, monitoring suggestions. No land acquisition is required for this sub-project. Provision of utilizing existing vacant is available forSWM sites within this DRP Camp_20. The sub-project location was selected with the support ofCiC, SMC and local DPHE. Consultation meeting was also conduct with local representatives who will be direct or indirectly related in the sub-project. The assigned consultants and local DPHE, CiC representatives, SMC and WASH focal team have visited the proposed site location and after then prepared the screening report. Initially the team surveyed the locality and primarily sorted (2-3) places to establish the scheme.

Construction induced impact issues:

Since theSWM sub-project intervention is being implemented in an empty place of Government-owned land and there is no land acquisition, so there will not be raised any construction induced impacts. During construction, movements of heavy vehicles or construction materials may cause damages to the shelters or assets. If any damages are reported, DPHE will hold consultations with the site management along with contractors and camp focal points to take mitigation measures according to ESMF and RPF.

Labor issues:

ProposedSWM establishment scheme will be executed by the contractor who will engage both skilled (5-6 nos.) & unskilled (8-10 nos.) labors. The unskilled labor will be engaged from the camp while the skilled labor from the local/host community/other places of Bangladesh. No foreign labor will be required to implement the sub-project activities. Since the number of external workers will be very few and working for short periods of time (more than 4 months), usually there will have no competition in using resources amongst the host and DRP communities. Thus, the sub-project will not create any influx of workers. The unskilled labors will be hired from the DRP community of Camp_20, who already reside in the camp. The skilled labors will be accommodated on site in the DRP camp by the contractors. The contractor will make temporary labor shed for both of his male & female (if necessary) labor. Area of the shed will be around(15ftX15ft) for males and (15ftX12ft) for females. All laborers (skilled and unskilled) shall be given appropriate training and capacity development to entail a multitude of codes of conduct pertaining to conflict, GBV and other issues. ***"Labor's Code of Conduct***" is attached in ***Appendix-6.***

Linkage with other stakeholders:

The team has provided emphasis to keep better linkage with related stakeholders (i.e.,CiC, Camp focal, WASH focal, DRP & Host Community, INGO & Local NGO etc.). The team conducts several types of consultation meeting with them group/individually for any social issues.

GBV issues:

The proposed sub-project activities will involve civil works through skilled (from the host community) and unskilled (from the DRP community) labor. A strict labor code of conduct will be enforced. A GRM will be established to deal with related issues. The team will conduct consultation meetings with

the DRP, contractors and labor to address GBV. If any odd situations arise, the GRC will attempt to mitigate any issues according to the ESMF GRM guideline. On the other hand, if any private land/land leases issues arise, the team will conduct a consultation meeting with the owner and relevant stakeholders according to the ESMF & resettlement guideline. GBV issues will be monitored & monitoring progress will be incorporated within monthly progress report.

Beyond of these, under the UNFPA 9th Country Programme ‘‘Advanced gender equality, women’s and girls’ empowerment, and reproductive rights, including for the most vulnerable and marginalized women, adolescents and youth’’ will be achieved as the project is a part of Gender Component of the UNFPA 9th Country Programme. In the event any issues on GBV arise, they will be well communicated with UNFPA through appropriate channels to resolve the issue following proper processes.

Various tools will be developed/adapted to facilitate GBV services, MHPSS services and engaging men and boys into GBV prevention work. Along with the GBV case management services, GBV and labor code of conduct awareness programs will be implemented, where all stakeholders including the host and DRP communities, labor engaged for the project, site management, the WB and project clients such as DPHE and LGD can participate.

Consultations and Future Consultations:

Under the EMCRP, the DPHE has initiated elaborate consultations with various stakeholders of this project for theSWM schemes site management. These includes GIS specialist (initially), hydrogeologist located in the scheme area, IWM E&S consultants, local DPHE authorities, other development partners such as UN as well as the DRP community. These sessions covered topics such as WB introduced Social and Environmental safeguard issues, GRM, possible social environmental and economic effects, livelihoods options, discussions on minimizing the laborer conflict among DRP and local host communities, Infrastructure, WASH, hygiene, GBV, forestation, waste, waste management. Most importantly, the benefits of SWM. It was also determined that there is no Elephant corridor and no scope of Elephant/Human conflict in the site area. The DRP community were made aware and sensitized on E&S safeguard issues, precautions, child safety, avoid resettlement, relocations of local institutions (mosques, school/ learning centers & others, any restrictions for the DRP, and compensation mechanisms in the event of any objection and complaints.

Thus, future consultations during the lifetime of the project is expected to ensure that negative social and environmental impacts are being mitigated with due consideration of community needs and opinions. Consultations will involve determining with the site management team whether proper signage is being used (e.g. for occupational hazard) and whether a properly GRM system is being implemented through an efficient GRC. The GRM will be set up to serve as an integral tool for engaging the various stakeholders during the project activities and its implementation. There will have a complaint book for stakeholders where all sorts of complaint will be registered. The GRM will be institutionalized with qualified personnel having adequate training in deal with relevant complaints. The GRM will be available for a wide array of issues such as malpractice, labor issues and GBV.

Labor and Contractors management during COVID-19:

Recommendations

For projects involving construction/civil works,

Contractors will develop specific procedures or plans so that adequate precautions are in place to prevent or minimize an outbreak of COVID-19, and what should be done if a worker gets sick.:

- DPHE has oriented the contractor and labor on Covid-19 management including OHS (Occupational Health Safety).
- Assessing the characteristics of the workforce, including those with underlying health issues or who may be otherwise at risk
- Confirming workers are fit for work, to include temperature testing and refusing entry to sick workers
- Considering ways to minimize entry/exit to site or the workplace, and limiting contact between workers and the community/general public
- Training workers on hygiene and other preventative measures, and implementing a communication strategy for regular updates on COVID-19 related issues and the status of affected workers
- Treatment of workers who are or should be self-isolating and/or are displaying symptoms
- Assessing risks to continuity of supplies of medicine, water, fuel, food and PPE, taking into account international, national and local supply chains
- Reduction, storage and disposal of medical waste
- Adjustments to work practices, to reduce the number of workers and increase social distancing
- Expanding health facilities on-site compared to usual levels, developing relationships with local health care facilities and organize for the treatment of sick workers
- Building worker accommodations further apart, or having one worker accommodation in a more isolated area, which may be easily converted to quarantine and treatment facilities, if needed
- Establishing a procedure to follow if a worker becomes sick (following WHO guidelines)
- Implementing a communication strategy with the community, community leaders and local government in relation to COVID-19 issues on the site.

For supporting health facilities,

Plans or procedures will be in place to address the following issues:

- Obtaining adequate supplies of medical PPE, including gowns, aprons, curtains; medical masks and respirators (N95 or FFP2); gloves (medical, and heavy duty for cleaners); eye protection (goggles or face screens); hand washing soap and sanitizer; and effective cleaning equipment. Where relevant PPE cannot be obtained, the plan should consider viable alternatives, such as cloth masks, alcohol-based cleansers, hot water for cleaning and extra handwashing facilities, until such time as the supplies are available
- Training medical staff on the latest WHO advice and recommendations on the specifics of COVID-19
- Conducting enhanced cleaning arrangements, including thorough cleaning (using adequate disinfectant) of catering facilities/canteens/food/drink facilities, toilets/toilets/showers, common areas, including door handles, floors and all surfaces that are touched regularly
- Training and providing cleaning staff with adequate PPE when cleaning consultation rooms and facilities used to treat infected patients

- Implementing a communication strategy/plan to support regular communication, accessible updates and clear messaging to health workers, regarding the spread of COVID-19 in nearby locations, the latest facts and statistics, and applicable procedures.

COVID Management Guidelines during implementation:

A. Labor, Workers and Working Conditions:

Contractors are responsible to manage the labors, workers and working conditions. PMU with the support of superstition and monitoring firms will ensure implementation.

- Stop any Project Activities that may increase community exposure to COVID risks
- Communicate to communities about protective COVID risks and measures
- Monitor incidence and outbreak of communicable diseases
- Identify hotspots based on health data available
- Screen Security personnel for COVID
- Follow strict protocols in management of project interventions that may increase the COVID risk for human health (for instance in livestock and commercial farming)
- Undertake preventive measures in resettlement settlements
- Practice social distancing in meetings, workshops and consultations

B. Entry/Exit to the work site and checks on commencement of work:

- Entry/exit to the work site will be controlled and documented for both workers and other parties, including support staff and suppliers. Possible measures will include:
- Controlling entry/exit to the site, securing the boundaries of the site, and establishing designating entry/exit points. Entry/exit to the site will be documented.
- Training security staff on the (enhanced) system that has been put in place for securing the site and controlling entry and exit, the behaviors required of them in enforcing such system and any COVID -19 specific considerations.
- Training staff who will be monitoring entry to the site, providing them with the resources they need to document entry of workers, conducting temperature checks and recording details of any worker that is denied entry.
- Confirming that workers are fit for work before they enter the site or start work. Special attention will be paid to workers with underlying health issues or who may be otherwise at risk. Consideration will be given to demobilization of staff with underlying health issues.
- Checking and recording temperatures of workers and other people entering the site or requiring self-reporting prior to or on entering the site.
- Providing daily briefings to workers prior to commencing work, focusing on COVID-19 specific considerations including cough etiquette, hand hygiene and distancing measures, using demonstrations and participatory methods.

- During the daily briefings, reminding workers to self-monitor for possible symptoms (fever, cough) and to report to their supervisor or the COVID-19 focal point if they have symptoms or are feeling unwell.
- Preventing a worker from an affected area or who has been in contact with an infected person from returning to the site for 14 days or (if that is not possible) isolating such worker for 14 days.
- Preventing a sick worker from entering the site, referring them to local health facilities if necessary or requiring them to isolate at home for 14 days.

C. Land Acquisition and Involuntary Resettlement:

Though this sub-project will not require land acquisition and involuntary resettlement but during implementation if any involuntary resettlement issues arise, following steps will be followed:

- Identify vulnerable PAPs and Non-title holders who may have increased vulnerability due to COVID outbreak and (lockdown or loss of livelihood); particularly NTH
- Make accelerated payments for compensation and/or livelihood restoration to project affected persons, especially vulnerable households, non-titled holders to help them cope with lockdown;
- Employ local population on wage labor, make advance payments;
- Manage migrant labor for COVID related risks
- Invest in living conditions in relocation settlements

D. Community Health and Safety:

PMU and contractors are responsible to implement the following

- Stop any Project Activities that may increase community exposure to COVID risks
- Communicate to communities about protective COVID risks and measures
- Monitor incidence and outbreak of communicable diseases
- Identify hotspots based on health data available
- Screen Security personnel for COVID
- Follow strict protocols in management of project interventions that may increase the COVID risk for human health (for instance in livestock and commercial farming)
- Undertake preventive measures in resettlement settlements
- Practice social distancing in meetings, workshops and consultations

E. Stakeholders and Citizen and Grievance Mechanism:

- Disseminate COVID advisories over phones, texts, what's app groups, radio, TV, frontline workers Communication;
- Monitor existing grievance and public information mechanisms for any COVID related grievance, queries etc.;
- Widely disseminate material on those who have recovered from COVID to remove stigma
- Include Doctor or medical staff in the GRM
- Use more video conference facilities and conferences.

Recommendation for further environmental and social assessment and/or site specific environmental and social management plan: Yes/No

*If yes, please specify what assessments/plans would be required. Mention some recommendation on E&S assessment …. ESMP

Yes. ESMP is required & attached within ***Appendix-01.***

Appendix -01 Environmental and Social Management Plan (ESMP):

Considering proposed interventions of the proposed SWM system, Environmental and Social Management Plan (ESMP) in different phase of the subproject is given below:

Project Stage	Potential Environmental & Social Impacts/ Issues	Proposed Mitigation Measures/indicators	Institutional Responsibilities	Supervision Responsibility
Pre-Construction Stage	Assessment of Social Impacts and Risks	To meet the requirements for disadvantaged and vulnerable directive: • Include COVID positive individuals, households and clusters as vulnerable category in Social Assessment TORs, surveys and consultations (particularly relating to social stigma); • Consult with such COVID positive households to Identify specific support mechanisms that projects could support; • Add tribal communities in self isolation under vulnerable groups who may need suitable and socially acceptable support; • Use alternative and virtual and video means for	PMU	Social Development and Hygiene Promotion Consultant of PMU, Supervision and monitoring firms.

Project Stage	Potential Environmental & Social Impacts/ Issues	Proposed Mitigation Measures/indicators	Institutional Responsibilities	Supervision Responsibility
		consultations and interactions.		
Pre-Construction Stage	Loss/source of livelihoods	• Under this sub-project, there is no scope of negative impact of DRP livelihoods. • Ensure engagement of local labor as unskilled worker	PMU &Contractor	Social Development and Hygiene Promotion Consultant of PMU
Pre-Construction Stage	Stakeholders Engagement	• All the project stakeholders will be engaged in consultation process • Consultation meeting with Rohingya male and female about the project safeguard documents will be disclosed to the stakeholders	PMU & Contractor	Social Development and Hygiene Promotion Consultant of PMU

Project Stage	Potential Environmental & Social Impacts/ Issues	Proposed Mitigation Measures/indicators	Institutional Responsibilities	Supervision Responsibility
		• DRP camp people will be involved with the GRM, formed GRC • Consultation meeting with will be held contractors and labors about safe guard issues.		
Pre-Construction Stage	Loss of Access rights	• Prior to start the work, contractor will inform the community people to use alternative roads; • Construction work will be completed in quick time as much as possible to reduce the hassle of community • Project to ensure thorough analysis of alternatives that access enjoyed by the community remains intact. • In case of unavoidable circumstances, alternative access will be provided.	Contractor	Social Development and Hygiene Promotion Consultant of PMU
Pre-Construction Stage	Improper site selection for proposed intervention can be a cause of HEC at subproject site**.**	• Selection of sub-project sites will be outside of the elephant	PMU	Environmental Consultant of PMU, IWM

Project Stage	Potential Environmental & Social Impacts/ Issues	Proposed Mitigation Measures/indicators	Institutional Responsibilities	Supervision Responsibility
		route/corridor/influenced area. • Before finalized the location of sub-project must be contact with camp wash focal • Bangladesh Forest Department (BFD) and Border Guard Bangladesh (BGB) already fixed up the camp area and boundary. Sub-project Interventions will be also included in this area. So, no need to take any further consent for those purpose, if any circumstance arisen.		
Pre-Construction Stage	Site Preparation: Soil Erosion; Alteration of natural drainage	• Vegetation clearing work not to be done more than required area of proposed intervention; • Minimize cut & fill operations, the site clearing and grubbing operations should be limited to specific locations only. • The existing slope and	PMU & Contractor	Environmental Consultant of PMU, IWM

Project Stage	Potential Environmental & Social Impacts/ Issues	Proposed Mitigation Measures/indicators	Institutional Responsibilities	Supervision Responsibility
		natural drainage pattern on the site should not be significantly altered because construction material/ equipment will be stored in selected place with sufficient earthen drainage facilities around to ensure continuous connection with nearby natural water body		
Pre-Construction Stage	Impact on Existing drainage: drain may block, due to storage of construction materials on or next to the drain.	• The Contractor will not be allowed to store construction materials beside drains • Regular monitoring is essential • If any materials fall within the drain, contractor will clean the drain immediately.	PMU & Contractor	Environmental Consultant of PMU, IWM
Pre-Construction Stage	Storage of construction materials can cause pollution or land slips	• Train the concerned person, team assigned for the construction work regarding proper storage procedures: away from steep slopes, proper bonding to avoid runoff	PMU & Contractor	Environmental Consultant of PMU, IWM

Project Stage	Potential Environmental & Social Impacts/ Issues	Proposed Mitigation Measures/indicators	Institutional Responsibilities	Supervision Responsibility
		from site.		
Pre-Construction Stage	Transportation Impact	• All vehicle movement to be done during the day time • Speed needs to be limited to 20kmph • Contractor's responsibility to verify the suitability carrying, loading and unloading of materials by trucks or others transport and head load arrangement.	PMU & Contractor	Environmental Consultant of PMU, IWM
Construction Activity	Noise pollution will occur due to use of diesel based construction equipment/vehicles movement	• Construction activity will be pat daytime, not more than 4.00 pm. Proper measures will be taken to avoid any disturbances. But some works will be continuing for 24 hours schedule like deep tube well drilling, development & testing. • Contractor will confirm proper measures for avoiding any disturbance of residents as well as biodiversity.	Contractor	Environmental Consultant of PMU, IWM

Project Stage	Potential Environmental & Social Impacts/ Issues	Proposed Mitigation Measures/indicators	Institutional Responsibilities	Supervision Responsibility
		• Ensure use of the personal protective equipment's (helmet, goggles, gloves, safety boot) during cutting and welding of the reinforcement and during drilling work; • Availability and access to first-aid equipment and medical supplies in case of any accidents. • Contractor will confirm proper measures for avoiding any disturbance of residents as well as biodiversity. • All construction activities which cause noise pollution, should be stopped during prayers.		
Construction Activity	Poorairqualityfromdustandemissionsaroundtheconstructionsite andmaterialhaulingroutes	• Water sprinkling to reduce the dust at the construction sites. Dust generation due to vehicle movement on haul roads/access roads shall be controlled through regular water sprinkling.	Contractor	Environmental Consultant of PMU, IWM

Project Stage	Potential Environmental & Social Impacts/ Issues	Proposed Mitigation Measures/indicators	Institutional Responsibilities	Supervision Responsibility
		• Use of dust masks to operators and those working in the dusty areas. • Construction machines/equipment will be well maintained to ensure total fuel combustion. All vehicles involved in construction works will be frequently checked and well serviced during the whole construction period so that the level of exhaust emissions is reduced. • Speed of vehicles hauling construction materials shall be reduced and the construction materials will be covered with tarpaulins. • Carry the materials especially loose soil and sand with adequate cover. • Ensure use of masks to construction workers if dust content is high.		
Construction	Safety Issues/impact may be decline if construction	• Unauthorized entry to the site area is completely	Contractor	Environmental Consultant of

Project Stage	Potential Environmental & Social Impacts/ Issues	Proposed Mitigation Measures/indicators	Institutional Responsibilities	Supervision Responsibility
Activity	management not works rightly	prohibited and the site will be properly fenced with a single entry, for this purpose • Properly maintained and control store house, storages instruments as well as hazardous materials on the site • Health and safety training will be arranged for the Rohingya or other communities' labors before project intervention started. • Labor will bring their proper IDs and wear when they will entry in the camp area. • Child labors will not be allowed for any kind of activities • Site shall be secured by fencing and maintained at entry points		PMU, IWM
Construction Activity	Traffic Management	• If need adequate alternative arrangements will be made to minimize impact on motorist and pedestrians.	Contractor	Environmental Consultant of PMU

Project Stage	Potential Environmental & Social Impacts/ Issues	Proposed Mitigation Measures/indicators	Institutional Responsibilities	Supervision Responsibility
		• Adequate road signs to be planted on access roads to limit vehicular speeds. • For access roads, speed ramps will be construct by proper design. • Traffic signs will be made both in Bangla and Rohingya language. • Only essential traffic will be allowed to the project area during traffic peak hours when traffic is a problem. • Materials hauling to tipping site and vice versa will be carried out during off peak periods during the day.		
Construction Activity	Increase in road accidents	• The movement of heavy machinery and equipment will be restricted to defined routes. • Proper signage to be displayed at major junctions. • Road diversions and closures to be informed well in advance to the local community.	Contractor	Environmental Consultant of PMU

Project Stage	Potential Environmental & Social Impacts/ Issues	Proposed Mitigation Measures/indicators	Institutional Responsibilities	Supervision Responsibility
		• The vehicular movement will be controlled near sensitive locations viz. schools, colleges, hospitals, mosques, learning center & DRP camps identified along designated vehicular transportation routes. • Local community will be trained up about traffic management and awareness.		
Construction Activity	**Social conflict** may arise between **camp workers and local residence** due to different behavior or custom of outsider worker (if any) as well as consumption of natural resource by the camp worker	• An alternate arrangement for fuel wood, heating and cooking required to meet fuel requirement of the labor camps. • Alternating cooking arrangement for the HHs living in the camp should be arrange by the contractor; • Contractor will closely monitor all workers so that workers do not involve with local politics as well as sexual harassment,	Contractor	Social Development and Hygiene Promotion Consultant of PMU, IWM

Project Stage	Potential Environmental & Social Impacts/ Issues	Proposed Mitigation Measures/indicators	Institutional Responsibilities	Supervision Responsibility
		trafficking of women and children. • Contractor will be arranged an awareness building training for the camp workers about nutrition, disaster risk resilience or mitigation, adoption of clean energy for cooking; and prevention of child abuse, child marriage, GBV, sexual harassment, trafficking of women and children as well as illegal drug trade. • Work force should be prohibited from disturbing the flora, fauna including hunting of animals, wildlife hunting, poaching and tree felling.		
Construction Activity	**Waste Management:** • Generated wastes during construction (earth, mud, concrete, pipe, brick, etc.) may cause of degrade the quality of nearby water quality (if any) and surrounding environment • -Hazardous waste i.e., waste oil, grease from vehicle	• All excavated spoil should be well managed through levelling or tipped into low lying areas or borrow areas which are no longer useful. • Wastes must be placed in the designated bins which	Contractor	Environmental Consultant of PMU, IWM

Project Stage	Potential Environmental & Social Impacts/ Issues	Proposed Mitigation Measures/indicators	Institutional Responsibilities	Supervision Responsibility
	maintenance also can decline the nearby water quality and surrounding environment if these are not properly managed • Generated waste from labor camp may cause pollution	must be regularly emptied; • All waste must be removed from the site and transported to a disposal site; • Working areas are kept clean and tidy at all times; • Construction site is to be checked for spills of substances i.e., chemical, oil, paint, etc.; • All waste fuel, oils, lubricants etc. will be stored separately and sold to or given for relevant recycling use. • Refueling and maintenance of equipment and vehicles should be done in selected confined area with base of impermeable layer (paved) so that waste could not spill and get contact with nearby water body and soil. Waste oil and mobile will be collected and subsequently sold to authorized recyclers. • The scrap material		

Project Stage	Potential Environmental & Social Impacts/ Issues	Proposed Mitigation Measures/indicators	Institutional Responsibilities	Supervision Responsibility
		generated from the erection of structures and related construction activities including generated mud will be collected and stored separately in a stack yard and regularly disposed in designated waste dump area and residue that is carried value will sold to local recyclers; • Hazardous Waste Management Rules should be maintained by the responsible contractor; • Informal training on handling of hazardous waste shall be done regularly by the ES of PMU and Contractor's HSE.		
Construction Activity	**Stagnant water risk**	• Water stagnant area should fence with marking tape • The top soils in the sub-project are sandy and the water should drain away quickly • Contractor should arranger	Contractor	Environmental Consultant as well as Social Development and Hygiene Promotion Consultant of

Project Stage	Potential Environmental & Social Impacts/ Issues	Proposed Mitigation Measures/indicators	Institutional Responsibilities	Supervision Responsibility
		proper water facilities (pup, etc.) • Proper PPEs are essential during construction work.		PMU
Construction Activity	**Storage of materials**	• By the site management committee in Camp to identify the storage site and other requirements, which will be approved by PMU and consultants.	Contractor	Environmental Consultant as well as Social Development and Hygiene Promotion Consultant of PMU
Construction Activity	**Health & Safety Risks** may be taken place for following reason to associates worker • The potential for exposure to safety risking events such as tripping, working at height activities, fire from hot works, smoking, failure in electrical installation, mobile plant and vehicles, and electrical shocks. • -Exposure to health hazardous events during construction activities such as manual handling and musculoskeletal disorders, hand-arm vibration, temporary or permanent hearing loss, heat stress, and dermatitis. • Fire safely Protection	• All construction equipment will be properly inspected timely. • The risk assessment will be prepared time to time for all types of work activities on site. • Proper walkways that are clearly designated as a walkway; all walkways shall be provided with good conditions underfoot; signposted and with adequate lighting. • Proper signpost any	Contractor	Environmental Consultant as well as Social Development and Hygiene Promotion Consultant of PMU

Project Stage	Potential Environmental & Social Impacts/ Issues	Proposed Mitigation Measures/indicators	Institutional Responsibilities	Supervision Responsibility
		slippery areas will be ensured in construction site. • Carry out fire risk assessment for the construction areas, identify sources of fuel and ignition and establish general fire precautions including, means of escape, warning and fighting fire. • A system to alert for workers will be setup on site. This may be temporary or permanent mains operated fire alarm. • Fire extinguishers will be located at identified fire points around the site. The extinguishers will be appropriated to the nature of the potential fire. • This sub project has Proper communicative emergency response plan (ERP) with all parties, the ERP to consider such things as specific foreseeable emergency		

Project Stage	Potential Environmental & Social Impacts/ Issues	Proposed Mitigation Measures/indicators	Institutional Responsibilities	Supervision Responsibility
		situations, organizational roles and authorities, responsibilities and expertise, emergency response and evacuation procedure, in addition to training for personnel and drills to test the plan. • Electrical equipment must be safe and properly maintained; works shall not be carried out on live systems. • Only competent authorized persons shall carry out maintenance on electrical equipment, adequate Personal Protective Equipment (PPE) for electrical works must be provided to all personnel involved in the tasks. • An adequate number of staff and first aiders shall be on site in accordance with Bangladesh Labor Law requirements. • First aid kit with adhesive bandages, antibiotic		

Project Stage	Potential Environmental & Social Impacts/ Issues	Proposed Mitigation Measures/indicators	Institutional Responsibilities	Supervision Responsibility
		ointment, antiseptic wipes, aspirin, non-latex gloves, scissors, thermometer, etc. shall be made available by the contractor on site. • Emergency evacuation response shall be prepared by the contractor and relevant staff shall be trained through mock-up drills. • Ensure all equipment is suitable for jobs (safety, size, power, efficiency, ergonomics, cost, user acceptability etc.), provide the lowest vibration tools that are suitable and can do the works. • All safety equipment will be available in sub-project site (safety, size, power, efficiency, ergonomics, cost, user acceptability etc.), the lowest vibration tools will be provided that are suitable and can do the works. • Regulated noise exposure		

Project Stage	Potential Environmental & Social Impacts/ Issues	Proposed Mitigation Measures/indicators	Institutional Responsibilities	Supervision Responsibility
		assessments and noise level surveys of noisy areas, processes and equipment shall be carried out in order to form the basis for remedial actions when necessary. • Contractor will provide Awareness training to all personnel involved during the construction phase in order to highlight the heat related illnesses of working in hot conditions such as heat cramps, heat exhaustion, heat stroke, and dehydration. • Adequate quantities of drinking water will be available at different locations within the sub-project area. • Provision to maintain proper PPE wherever necessary and to ensure that there are satisfactory washing and changing facilities. • Provision to ensure all		

Project Stage	Potential Environmental & Social Impacts/ Issues	Proposed Mitigation Measures/indicators	Institutional Responsibilities	Supervision Responsibility
		workers exposed to a risk are aware of the possible dangers and also given thorough training in how to protect themselves and there should be effective supervision to ensure that the correct methods are being used.		
Construction Activity	Safety(e.g.,injuriesfromfallingintotrenchesandopenpits)	• Construction sites shall be provided with barricades to protect DRP community and those passing-by. • Therefore, the public particularly the children shall not be allowed to come closer to the swing area of excavators or other equipment at site. • In places where there are vehicles transporting construction materials and also at turning places towards the construction site, appropriate warning signage shall be posted. • Sensitization and training of the surrounding	Contractor	Environmental Consultant; Social Development and Hygiene Promotion of PMU

Project Stage	Potential Environmental & Social Impacts/ Issues	Proposed Mitigation Measures/indicators	Institutional Responsibilities	Supervision Responsibility
		communities regarding the risks associated with construction activities. • In case of trenches, and excavated sewer lines, proper barricades have to be applied to warn and protect the DRP people of impending dangers of falling into open trenches.		
Operation & Maintenance	**Management of Leachate:** The general risks from leachate generated from wastes are due to its normally high organic contaminant concentrations and high ammoniacal nitrogen. Pathogenic microorganisms and hazardous substances that might be present in it are often cited as most dangerous	• During dry season leachate may use as reagent for composting (Source: ITN-BUET) • Leachate collection system shall be fully operative to prevent the contamination of the drain water of the area. Proper leachate collection system is provided within detail design (Drain & storage tank). Regular cleaning & maintenance of leachate carrying drain will be essential. Leachate storage tank is already provided within detail	Contractor: up to contractor's O & M period Long-term responsibility to be determined by CIC/DPHE	Environmental Consultant of PMU, Long-term responsibility to be determined by CIC/DPHE

Project Stage	Potential Environmental & Social Impacts/ Issues	Proposed Mitigation Measures/indicators	Institutional Responsibilities	Supervision Responsibility
		design • Regular monitoring of leachate storage tank will be essential. • When the leachate storage tank will be filled, it should be emptied by vacuum truck and leachate should be disposed at proper disposal site. • When the leachate tank will be filled, then leachate can be taken to dumping site and that shall be engraved in the earthen pit & soil cover shall be ensured at least one feet. • On the other hand, SWM operators must be properly and adequately trained to operate and maintain the installed control system. • Operation maintenance workers should use proper PPEs during operation.		
Operation & Maintenance	**Possible Contamination of Soil and Groundwater** In cases of leakages, the leachate will percolate into the ground and may find its way into existing groundwater	• Leachate collection system shall be fully operative to prevent the contamination	Contractor: up to contractor's O & M period	Environmental Consultant of PMU,

Project Stage	Potential Environmental & Social Impacts/ Issues	Proposed Mitigation Measures/indicators	Institutional Responsibilities	Supervision Responsibility
	resources.	of the ground water of the area. Proper leachate collection system is provided within detail design (Drain & storage tank). Regular cleaning & maintenance of leachate carrying drain will be essential. Leachate storage tank is already provided within detail design • For communal bin proper sock well is provided, regular maintenance of those sock wells (communal bin) will be essential. • To protect communal bins & box composting system from heavy rainfall, proper shade should provide to protect communal bins & box composting system from rainfall. Within design shade is provided for box composting system. Shade for communal bins should also provide. Regular	Long-term responsibility to be determined by CIC/DPHE	Long-term responsibility to be determined by CIC/DPHE

Project Stage	Potential Environmental & Social Impacts/ Issues	Proposed Mitigation Measures/indicators	Institutional Responsibilities	Supervision Responsibility
		maintenance of shades will be essential • Regular checking for functioning of leachate collection and disposal system. • Regular monitoring of ground water from the site shall be carried out to check whether any contamination is present		
	Impact on surface water: Improper collection system & improper management of leachate may cause pollution of drainage water & aquatic environment. Aquatic environment may also pollute by discharging leachate.	• During solid waste collection, waste should not keep on open space, waste should collect with covered truck or van & should transport directly to the box composting site. • Leachate collection system shall be fully operative to prevent the contamination of the drain water of the area. Proper leachate collection system is provided within detail design (Drain & storage tank). Regular cleaning & maintenance of leachate	Contractor: up to contractor's O & M period Long-term responsibility to be determined by CIC/DPHE	Environmental Consultant of PMU, Long-term responsibility to be determined by CIC/DPHE

Project Stage	Potential Environmental & Social Impacts/ Issues	Proposed Mitigation Measures/indicators	Institutional Responsibilities	Supervision Responsibility
		carrying drain will be essential. Leachate storage tank is already provided within detail design • For communal bin proper sock well is provided, regular maintenance of those sock wells (communal bin) will be essential. • To protect communal bins & box composting system from heavy rainfall, proper shade should provide to protect communal bins & box composting system from rainfall. Within design shade is provided for box composting system. Shade for communal bins should also provide. Regular maintenance of shades will be essential • Regular checking for functioning of leachate collection and disposal system.		

Project Stage	Potential Environmental & Social Impacts/ Issues	Proposed Mitigation Measures/indicators	Institutional Responsibilities	Supervision Responsibility
Operation & Maintenance	**Impact on existing drainage & Aquatic Environment**	• During solid waste collection, waste should not keep on open space, waste should collect with covered truck or van & should transport directly to the box composting site site. • Leachate collection system shall be fully operative to prevent the contamination of the drain water of the area. Proper leachate collection system is provided within detail design (Drain & storage tank). Regular cleaning & maintenance of leachate carrying drain will be essential. Leachate storage tank is already provided within detail design • For communal bin proper sock well is provided, regular maintenance of those sock wells (communal bin) will be essential. • To protect communal bins & box composting system from heavy rainfall, proper shade	Contractor: up to contractor's O & M period Long-term responsibility to be determined by CIC/DPHE	Environmental Consultant of PMU, Long-term responsibility to be determined by CIC/DPHE

Project Stage	Potential Environmental & Social Impacts/ Issues	Proposed Mitigation Measures/indicators	Institutional Responsibilities	Supervision Responsibility
		should provide to protect communal bins & box composting system from rainfall. Within design shade is provided for box composting system. Shade for communal bins should also provide. Regular maintenance of shades will be essential • Regular checking for functioning of leachate collection and disposal system.		
Operation & Maintenance	**Generation of Objectionable Odor and Impacts on Air Quality:** Objectionable odor is expected at communal bins & box composting sites depending on various factors. Some of which are the types of wastes being handled, humidity, temperature and moisture content, among others.	• Best management practices and good housekeeping measures will be implemented to minimize the release of objectionable odors. • Regular cleaning of communal bins will be essential. • Since decomposition of solid waste will be done in aerobic condition, so it is possible to reduce generation of odor with	Contractor: up to contractor's O & M period Long-term responsibility to be determined by CIC/DPHE	Environmental Consultant of PMU, Long-term responsibility to be determined by CIC/DPHE

Project Stage	Potential Environmental & Social Impacts/ Issues	Proposed Mitigation Measures/indicators	Institutional Responsibilities	Supervision Responsibility
		proper management.		
Operation & Maintenance	**Attraction of Vermin and other pests in the area** The operation of the communal bins & box composting system may attract presence of pests such as rats, cockroaches, flies, ants and other pests in the immediate area. These pests can freely move around the area and may find their way to DRP houses and areas adjacent to the box composting site. Since these pests are known to be carriers of diseases, they may trigger the sudden occurrence of illnesses and unacceptable conditions among people of weak resistance and children.	• Communal bins should have emptied regularly • Best management practices and good housekeeping measures will be implemented to minimize the problem • Collected organic solid waste should not keep for long time at west reception chamber of box composting system • Decomposed solid waste will be used as manure & it should remove from the box composting site regularly for agricultural use.	Contractor: up to contractor's O & M period Long-term responsibility to be determined by CIC/DPHE	Environmental Consultant of PMU, Long-term responsibility to be determined by CIC/DPHE
Operation & Maintenance	**Health & Safety Hazard**: In Operation phase, improper use of personal protective equipment (PPE) and lack of safety procedures may cause injuries. During solid waste collection it may cause health hazard (without propped management) to the DRP community.	• Regular checking of the adequacy of the facility, particularly when composting chambers & bins are full and during the rainy season. • Ensure proper training given to all staff	Contractor: up to contractor's O & M period Long-term responsibility to be determined by CIC/DPHE	Environmental Consultant of PMU, Long-term responsibility to be determined by CIC/DPHE

Project Stage	Potential Environmental & Social Impacts/ Issues	Proposed Mitigation Measures/indicators	Institutional Responsibilities	Supervision Responsibility
		• Ensure PPE used by all staff • During solid waste collection, waste should not keep on open space, waste should collect with covered truck or van & should transport directly to the box composting site site. • DPHE will engage one maintenance engineer (for 7 SWMS), six cleaning staff (for each SWMS) & 3 drivers (for 3 dump truck) during operation & maintenance period of SWMS. DPHE will trained up those O &M staffs properly before operation of SWMS.		

Appendix-02: Consultation Meeting DRP Community at Camp20, Block-M35

Appendix 03: List of the Participants

Community Consultation Meeting of Environmental and Social Management Framework for Emergency Multi- Sector Rohingya Crisis Response Project (EMCRP), DPHE, Cox' Bazar.

List of Participants

Camp No.- 20 Block No.- M-35 Sub project WD-08 Date: 19.09.21 Time- 12:00

Venue: Habizur Rahman Sir's Block-A

Sl. no.	Name	Sex M	Sex F	Designation	Mobile Number	Signature	Remarks
1	Abul Hosin	✓		Mosjee	01822381211		
2	Kamal Hossan	✓		FDMN	–		
3	Md. Shahidul	✓		〃	01889885013		
4	Abdus Salam	✓		〃	–		
5	Salim Ullah	✓		〃	01890857641		
6	Md. Yousaf	✓		〃	–		
7	Md Mohmed	✓		〃	–		
8	Mohmed	✓		〃	01849344654		
9	Habizur Rahman	✓		〃	01836651614		
10	Arif Ullah	✓		〃	01822576017		
11	Mohammed	✓		〃	–		
12	Jahangir	✓		〃	01939841921		
13	Noor Alam	✓		〃	–		
14	S M Rahman	✓		SDS, IWM	01744964885		
15							
16							
17							
18							
19							
20							
21							
22							
23							
24							
25							

Prepared by:

Md. Mostamsirur Rahman
Social Development Specialist
Pkg. No. SD-14, IWM, EMCRP, DPHE

Appendix 04: Typical design, description and unit cost of different partsof SWM System

1. Buckets for Collection of Household Solid Waste

As a part of this project, colored (Red and Green) plastic buckets will be supplied for storage of segregated solid waste components. Each household will be given a set of two buckets (with lid), one Green and one Red in color. The Green bucket will be used to store organic components of solid waste, while the red bucket will be used for storage of the remaining components of solid waste. The 15 Liter capacity, heavy duty, non-collapsible plastic bucket with lid and handle is a family container for storage of household solid waste. Stackable, made of High-Density Polyethylene (HDPE) or Polypropylene. Strong and durable quality for long life in tough conditions.

2. Communal Garbage Bin

Standard design has been developed for communal Garbage pits/bins for solid waste storage, and a total of 150 such pits/bins will be constructed at different locations/sites of the Rohingya Camps for improvement of SWM.Detail design of the bin is presented below. As shown in Figure below, each bin has two chambers, marked “Green” and “Red”. The Green chamber will be used for storage of organic portion of solid waste, while the Red chamber will be used for storage of the remaining part of solid waste.

3. Bin/Barrel Composting system

Standard design of Bin/Barrel composting unit developed for composting of organic portion of solid waste.

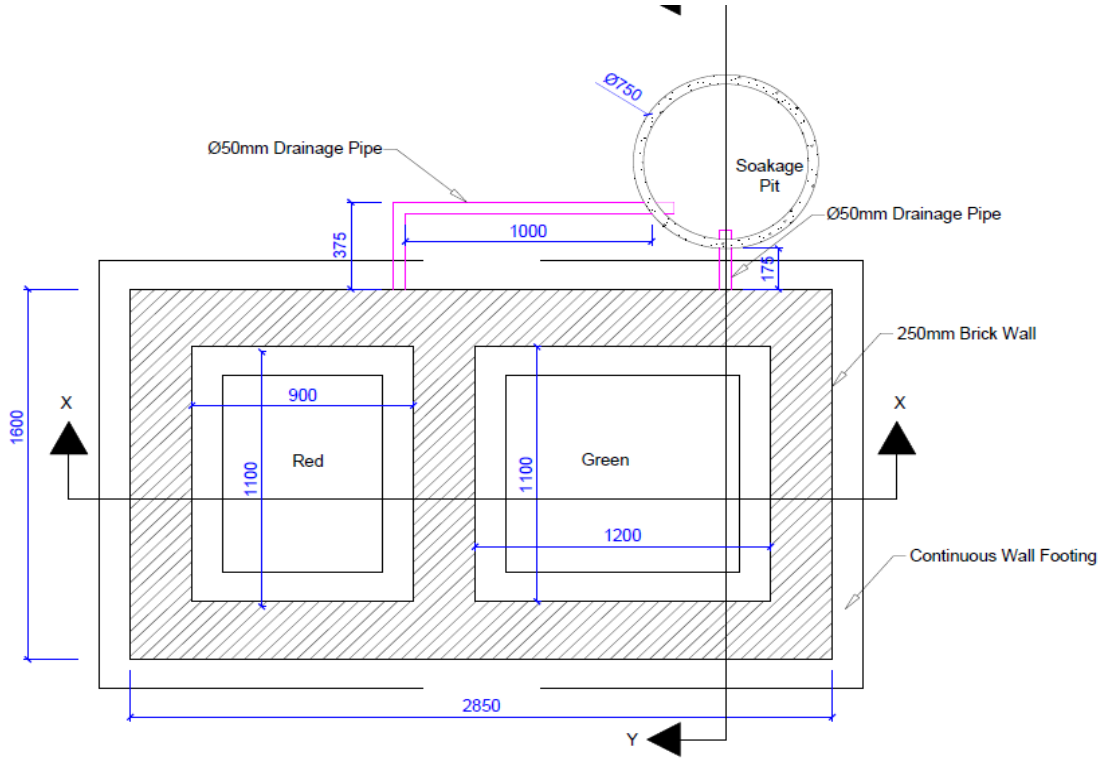

Plan View of Communal Garbage Bin

Note:
1. Approximate land area needed = 5.0m^2
2. All dimensions are in mm

PROJECT: EMERGENCY MULTI-SECTOR ROHINGYA CRISIS RESPONSE PROJECT (EMCRP): DESIGN (INCLUDING FEASIBILITY STUDY) OF FECAL SLUDGE AND SOLID WASTE MANAGEMENT SYSTEM (CONTRACT PACKAGE NO. S-15)	
CLIENT: DEPARTMENT OF PUBLIC HEALTH ENGINEERING	
CONSULTANT: ITN-BUET, BRTC, BUET, DHAKA-1000	
DRAWING TITLE:	Plan View of Communal Garbage Bin
DESIGNED BY: ITN- BUET	TEAM LEADER: Dr. MUHAMMAD ASHRAF ALI
CAD BY:	1. RAJESH CHAKRABORTY 2. MD. TARIQUL ISLAM
DATE:	16/09/2020
DRG. NO:	EMCRP/SWM/Communal/Bin/S01

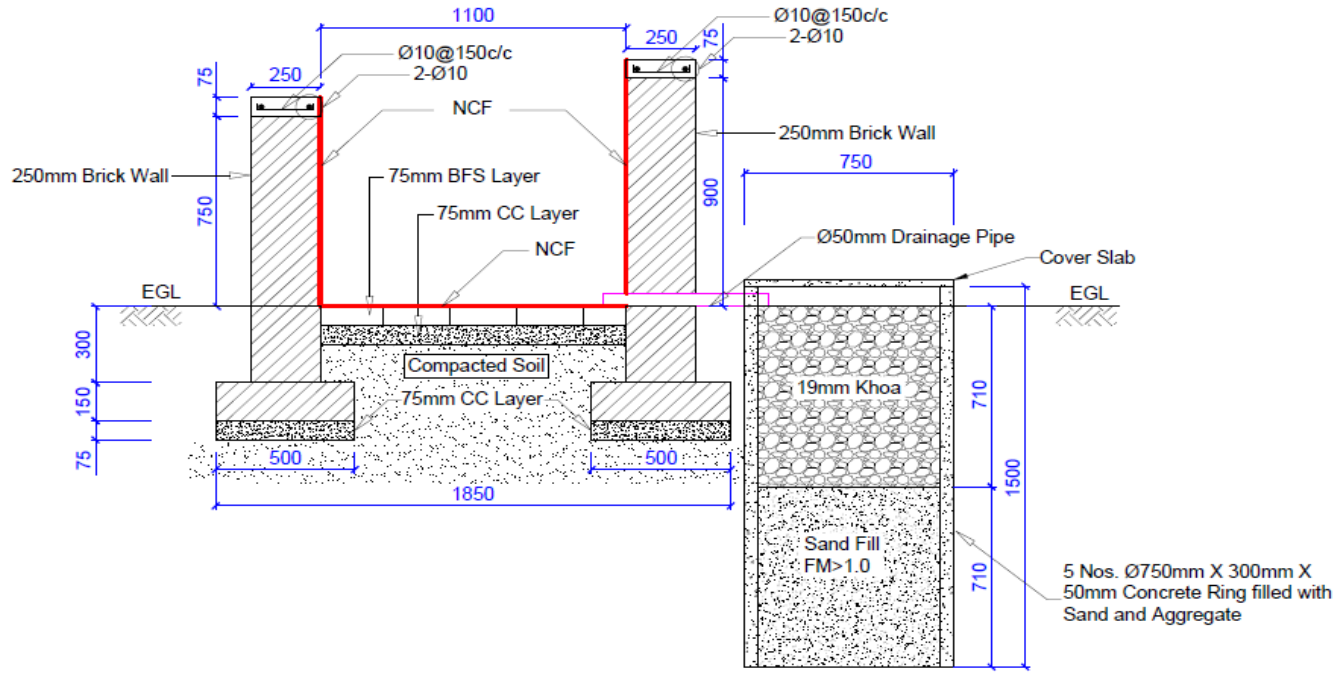

Sectional View of Communal Garbage Bin (Section Y-Y)

Note:
1. All dimensions are in mm

PROJECT: EMERGENCY MULTI-SECTOR ROHINGYA CRISIS RESPONSE PROJECT (EMCRP): DESIGN (INCLUDING FEASIBILITY STUDY) OF FECAL SLUDGE AND SOLID WASTE MANAGEMENT SYSTEM (CONTRACT PACKAGE NO. S-15)	
CLIENT: DEPARTMENT OF PUBLIC HEALTH ENGINEERING	
CONSULTANT: ITN-BUET, BRTC, BUET, DHAKA-1000	
DRAWING TITLE:	Sectional View of Communal Garbage Bin (Section Y-Y)
DESIGNED BY: ITN- BUET	TEAM LEADER: Dr. MUHAMMAD ASHRAF ALI
CAD BY:	1. RAJESH CHAKRABORTY 2. MD. TARIQUL ISLAM
DATE:	16/09/2020
DRG. NO:	EMCRP/SWM/CommunalBin/S03

4. Box Composting System

Box composting systems have been designed for larger-scale composting of the organic portion of solid wastes for 5,000 people. The important design and operational conditions considered in the design are listed below.

Basic considerations:

Solid waste generation is 0.184 kg/capita/day and compostable portion is 70% of the total waste.

Composting procedure:

After the collection of organic waste, it first comes to the reception area for sorting and mixing. After sorting and mixing of the organic input, it goes to a composting box. Each box is designed to be filled in layers over a period of 7 days. Thus, the first compost box will be filled win 7 days. After 7 days, the second box will be filled within the next 7 days. So, it will take 49 days to fill all 7 boxes, and on the 50th day, the first compost box will be emptied and taken to the “Maturing Boxes”. Thus, on every 8th day, one compost box will be emptied and fresh incoming waste will be placed in the emptied box, and the cycle continues. Organic part of solid waste remains within a box for 49 days. During this period, the contents will undergo aerobic decomposition, will lose moisture content and thus volume will be reduced.

Maturing procedure:

After the 49-day residence time inside a compost box, decomposed organic matter will be taken to the Maturing Box and will be kept there for 14 days for maturing. These boxes are designed in such a way that they can easily accommodate decomposed product from a composting box. Density of compost is considered to be about 200 kg/m3 for maturing phase with 50% weight reduction due to moisture loss. Two “Maturing Boxes” are provided to accommodate a continuous flow of incoming waste from the compost boxes. The capacity of a maturing box is designed to accommodate inputs from a compost box in a 7-day cycle.

Figures shows layout and sectional views of the box composting system for 5,000 people.

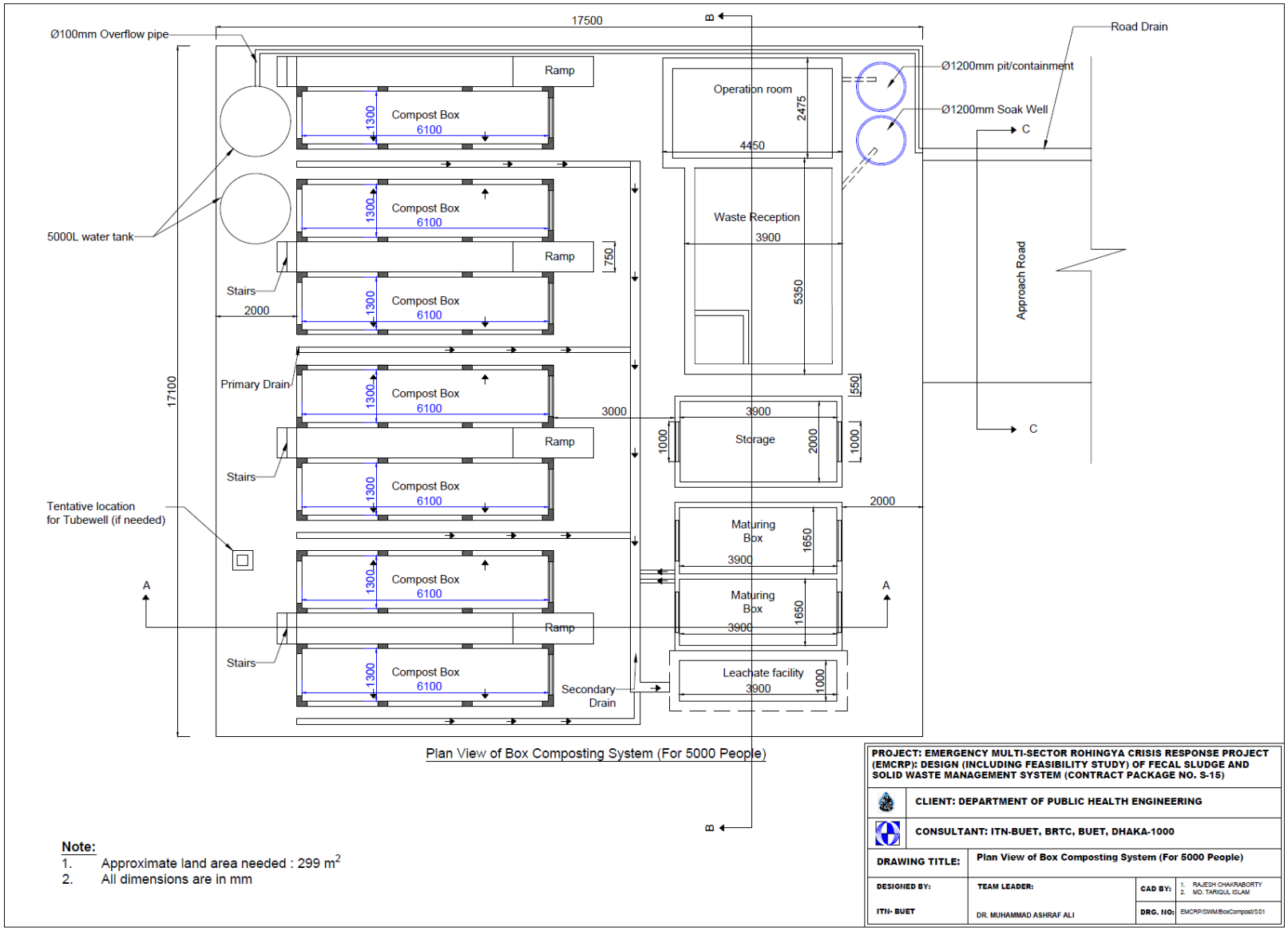

Plan View of Box Composting System (For 5000 People)

Note:

1. Approximate land area needed : 299 m^2
2. All dimensions are in mm

PROJECT: EMERGENCY MULTI-SECTOR ROHINGYA CRISIS RESPONSE PROJECT (EMCRP): DESIGN (INCLUDING FEASIBILITY STUDY) OF FECAL SLUDGE AND SOLID WASTE MANAGEMENT SYSTEM (CONTRACT PACKAGE NO. S-15)	
CLIENT: DEPARTMENT OF PUBLIC HEALTH ENGINEERING	
CONSULTANT: ITN-BUET, BRTC, BUET, DHAKA-1000	
DRAWING TITLE:	Plan View of Box Composting System (For 5000 People)
DESIGNED BY: ITN- BUET	TEAM LEADER: DR. MUHAMMAD ASHRAF ALI
CAD BY:	1. RAJESH CHAKRABORTY 2. MD. TARIQUL ISLAM
DRG. NO:	EMCRP/SWM/BoxCompost/SD1

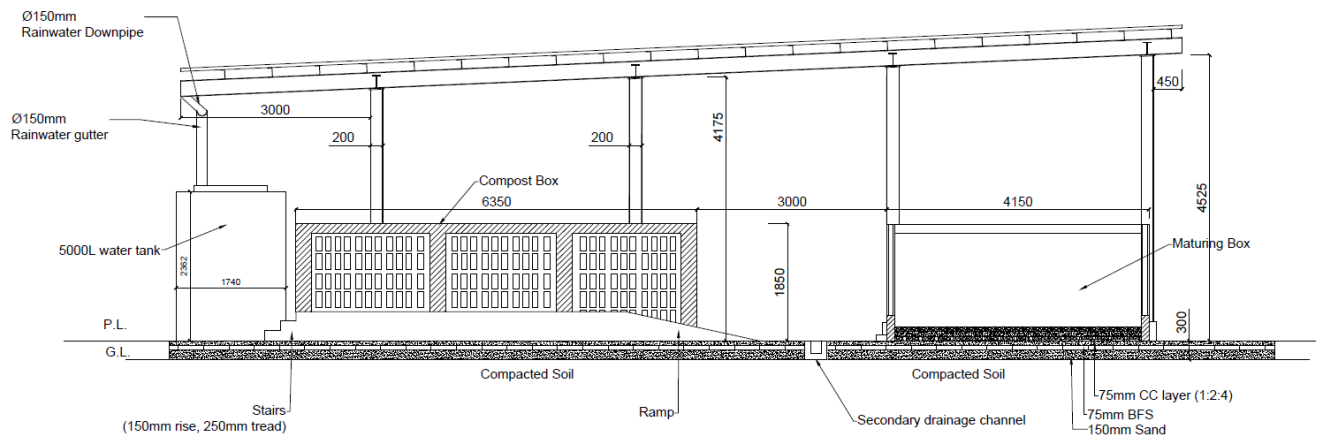

Sectional View of Box Composting System (Section A-A)

Note:
1. All dimensions are in mm

PROJECT: EMERGENCY MULTI-SECTOR ROHINGYA CRISIS RESPONSE PROJECT (EMCRP): DESIGN (INCLUDING FEASIBILITY STUDY) OF FECAL SLUDGE AND SOLID WASTE MANAGEMENT SYSTEM (CONTRACT PACKAGE NO. S-15)			
CLIENT: DEPARTMENT OF PUBLIC HEALTH ENGINEERING			
CONSULTANT: ITN-BUET, BRTC, BUET, DHAKA-1000			
DRAWING TITLE:	Sectional View of Box Composting System (Section A-A)		
DESIGNED BY: ITN- BUET	TEAM LEADER: DR. MUHAMMAD ASHRAF ALI	CAD BY:	1. RAJESH CHAKRABORTY 2. MD. TARIQUL ISLAM
		DRG. NO:	EMCRP/SWM/BoxCompost/S:02

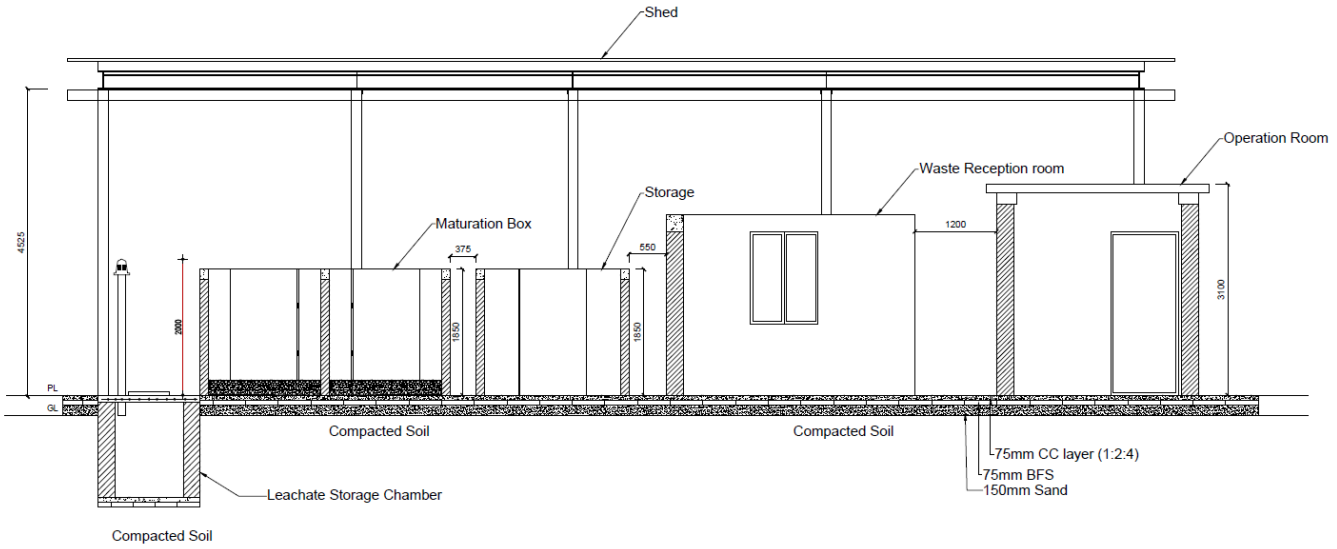

Sectional View of Box Composting System (Section B-B)

Note:

1. All dimensions are in mm

PROJECT: EMERGENCY MULTI-SECTOR ROHINGYA CRISIS RESPONSE PROJECT (EMCRP): DESIGN (INCLUDING FEASIBILITY STUDY) OF FECAL SLUDGE AND SOLID WASTE MANAGEMENT SYSTEM (CONTRACT PACKAGE NO. S-15)	
CLIENT: DEPARTMENT OF PUBLIC HEALTH ENGINEERING	
CONSULTANT: ITN-BUET, BRTC, BUET, DHAKA-1000	
DRAWING TITLE:	Sectional View of Box Composting System (Section B-B)
DESIGNED BY: ITN- BUET	TEAM LEADER: DR. MUHAMMAD ASHRAF ALI
CAD BY:	1. RAJESH CHAKRABORTY 2. MD. TARIQUL ISLAM
DRG. NO:	EMCRP/SWM/BoxCompost/S03

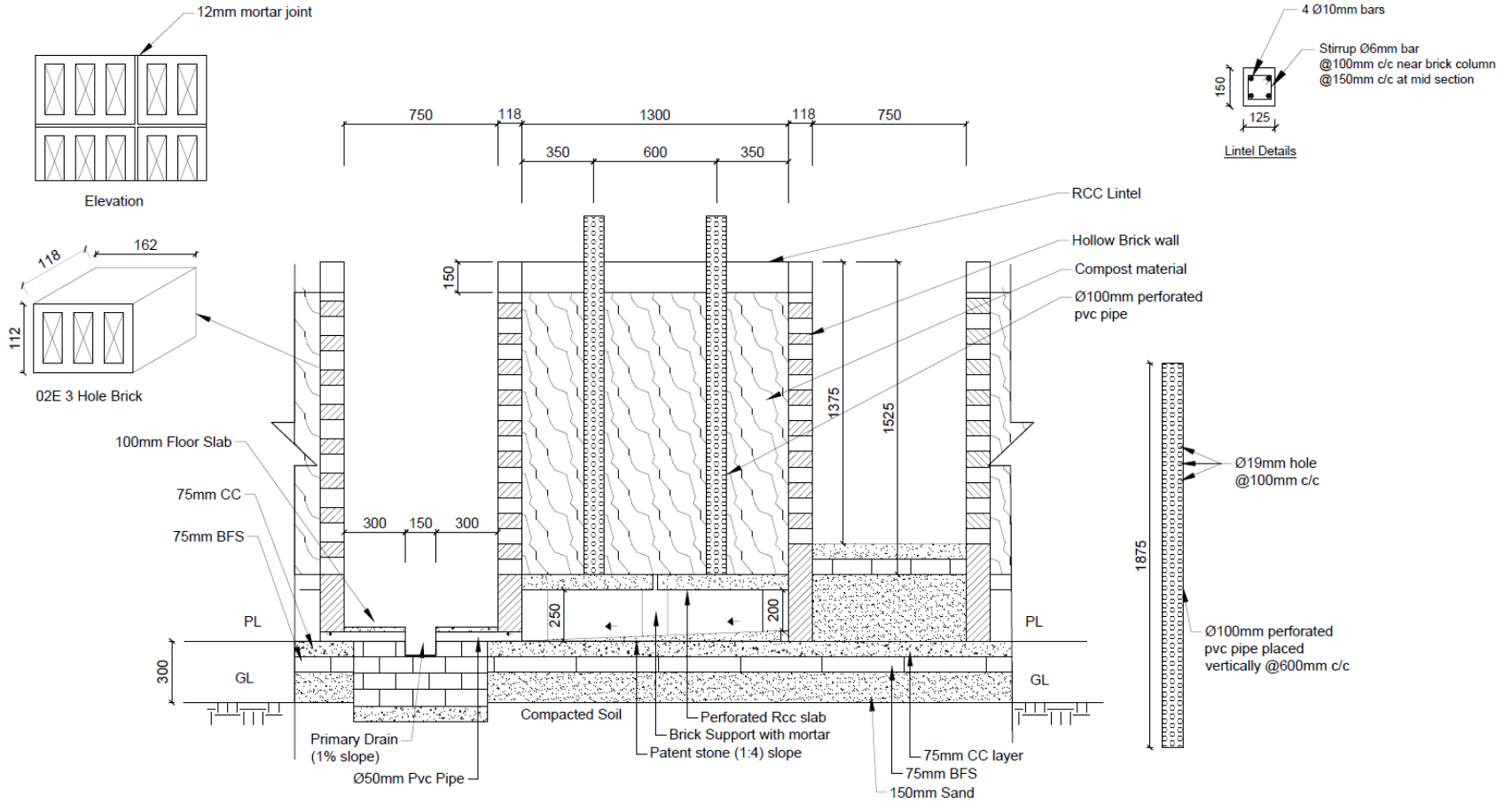

Transverse Section of Compost Box and Primary Drainage (Section B-B)

Note:

1. All dimensions are in mm

PROJECT:	**EMERGENCY MULTI-SECTOR ROHINGYA CRISIS RESPONSE PROJECT (EMCRP): DESIGN (INCLUDING FEASIBILITY STUDY) OF FECAL SLUDGE AND SOLID WASTE MANAGEMENT SYSTEM (CONTRACT PACKAGE NO. S-15)**
CLIENT:	**DEPARTMENT OF PUBLIC HEALTH ENGINEERING**
CONSULTANT:	**ITN-BUET, BRTC, BUET, DHAKA-1000**
DRAWING TITLE:	**Transverse Section of Compost Box and Primary Drainage (Section B-B)**
DESIGNED BY: ITN- BUET	**TEAM LEADER:** DR. MUHAMMAD ASHRAF ALI
CAD BY:	1. RAJESH CHAKRABORTY 2. MD. TARIQUL ISLAM
DRG. NO:	EMCRP/SWM/BoxCompost/S19

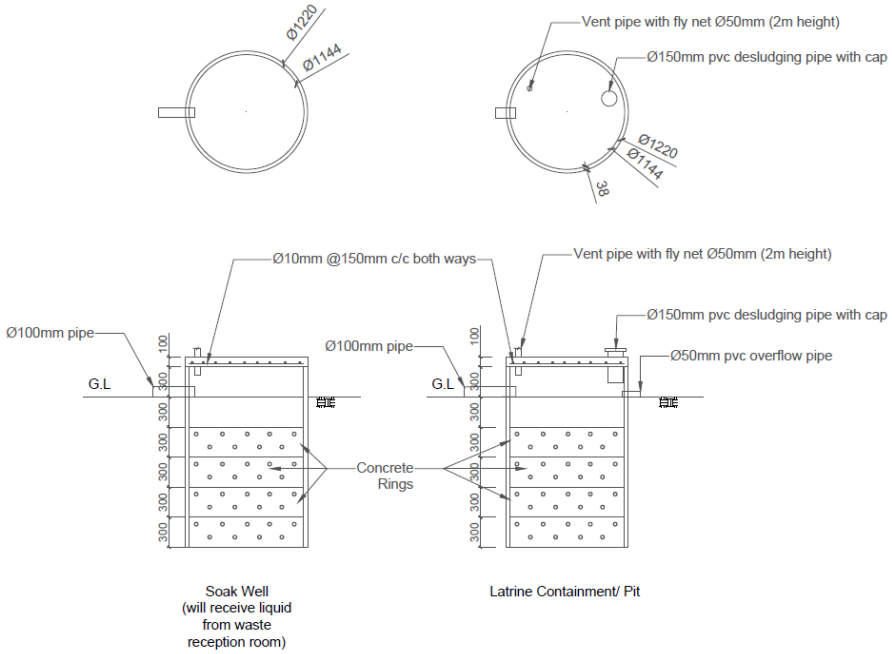

Details of Containment Well and Soak Well

Note:
1. All dimensions are in mm

PROJECT: EMERGENCY MULTI-SECTOR ROHINGYA CRISIS RESPONSE PROJECT (EMCRP): DESIGN (INCLUDING FEASIBILITY STUDY) OF FECAL SLUDGE AND SOLID WASTE MANAGEMENT SYSTEM (CONTRACT PACKAGE NO. S-15)	
CLIENT: DEPARTMENT OF PUBLIC HEALTH ENGINEERING	
CONSULTANT: ITN-BUET, BRTC, BUET, DHAKA-1000	
DRAWING TITLE:	Details of Containment Well and Soak Well
DESIGNED BY: ITN- BUET	TEAM LEADER: DR. MUHAMMAD ASHRAF ALI
CAD BY:	1. RAJESH CHAKRABORTY 2. MD. TARIQUL ISLAM
DRG. NO:	EMCRP/SWM/BoxCompost/S05

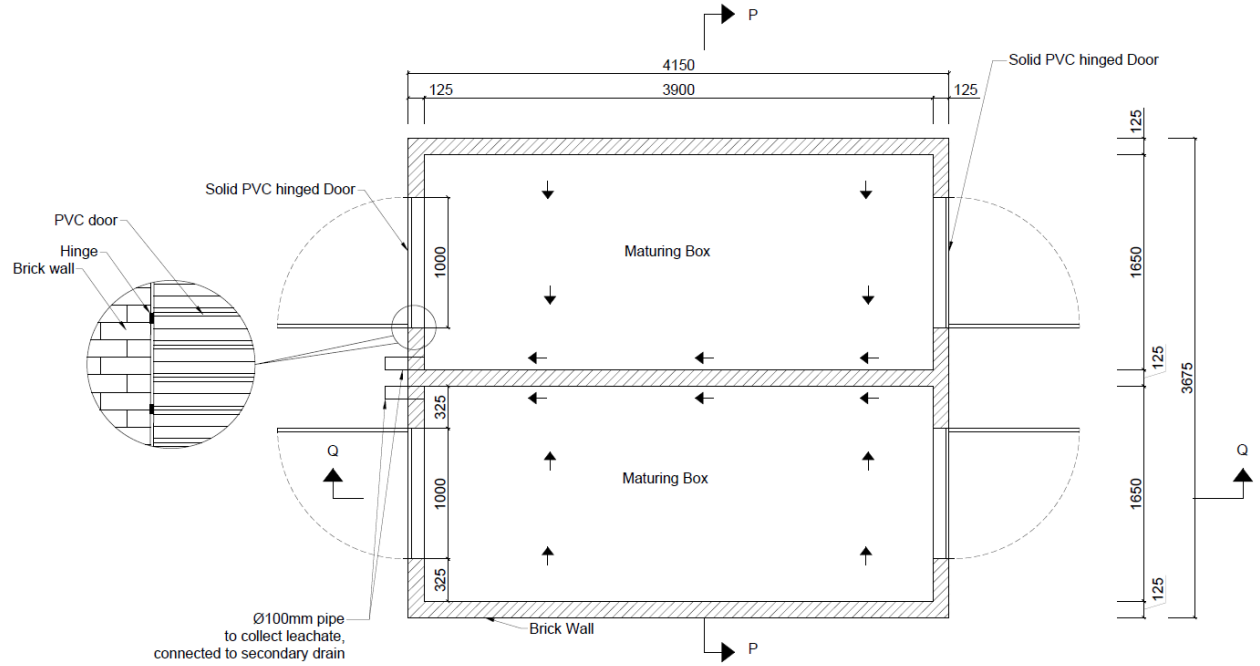

Plan View of Maturing Box

Note:
1. All dimensions are in mm

PROJECT: EMERGENCY MULTI-SECTOR ROHINGYA CRISIS RESPONSE PROJECT (EMCRP): DESIGN (INCLUDING FEASIBILITY STUDY) OF FECAL SLUDGE AND SOLID WASTE MANAGEMENT SYSTEM (CONTRACT PACKAGE NO. S-15)	
CLIENT: DEPARTMENT OF PUBLIC HEALTH ENGINEERING	
CONSULTANT: ITN-BUET, BRTC, BUET, DHAKA-1000	
DRAWING TITLE:	Plan View of Maturing Box
DESIGNED BY: ITN- BUET	TEAM LEADER: DR. MUHAMMAD ASHRAF ALI
CAD BY:	1. RAJESH CHAKRABORTY 2. MD. TARIQUL ISLAM
DRG. NO:	EMCRP/SWM/BoxCompost/S24

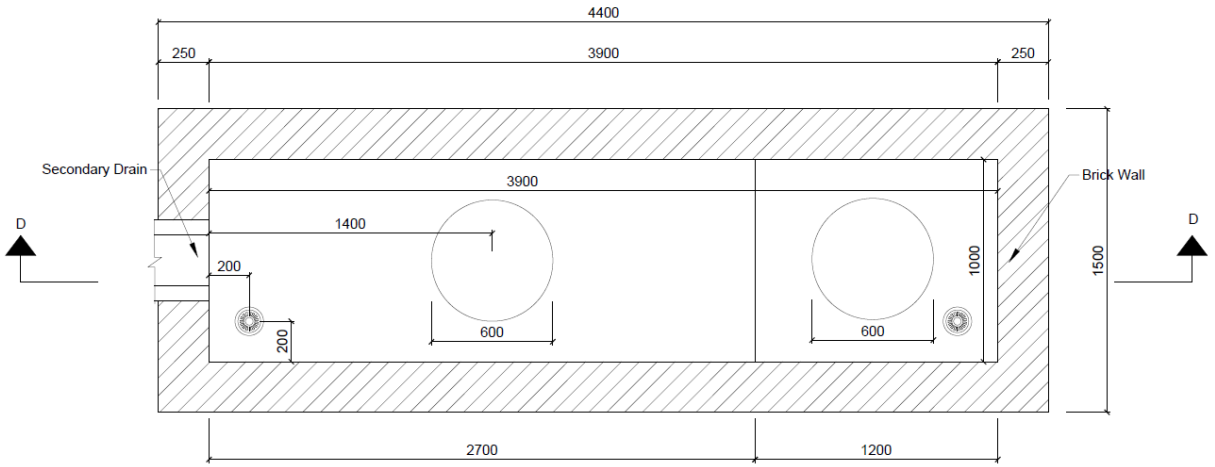

Plan View of Leachate Storage Chamber

Note:

1. All dimensions are in mm

PROJECT: EMERGENCY MULTI-SECTOR ROHINGYA CRISIS RESPONSE PROJECT (EMCRP): DESIGN (INCLUDING FEASIBILITY STUDY) OF FECAL SLUDGE AND SOLID WASTE MANAGEMENT SYSTEM (CONTRACT PACKAGE NO. S-15)	
CLIENT: DEPARTMENT OF PUBLIC HEALTH ENGINEERING	
CONSULTANT: ITN-BUET, BRTC, BUET, DHAKA-1000	
DRAWING TITLE:	Plan View of Leachate Storage Chamber
DESIGNED BY: ITN- BUET	TEAM LEADER: DR. MUHAMMAD ASHRAF ALI
CAD BY:	1. RAJESH CHAKRABORTY 2. MD. TARIQUL ISLAM
DRG. NO:	EMCRP/SWM/BoxCompost/S-27

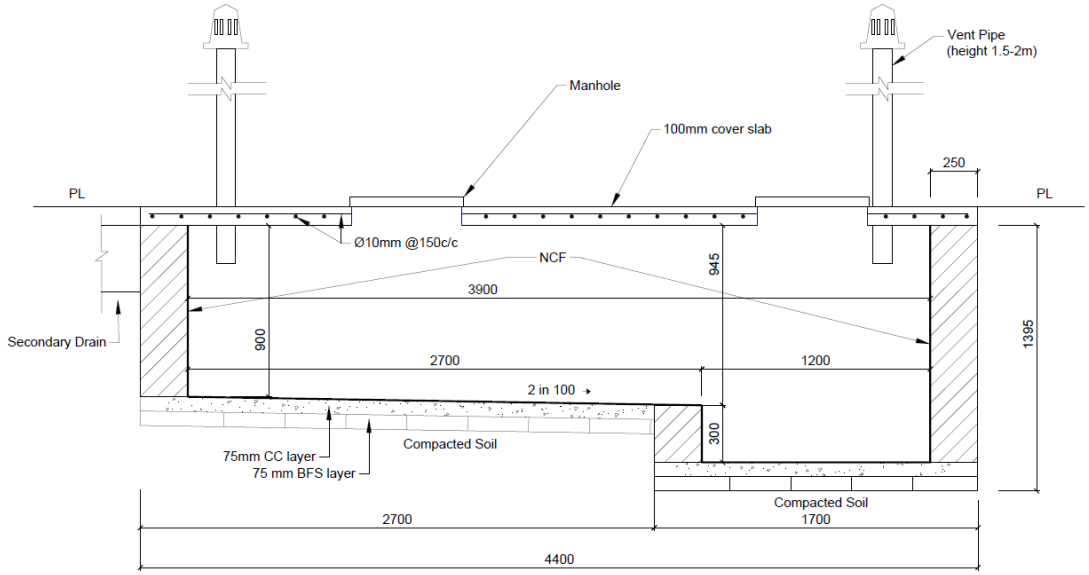

Sectional View of Leachate Storage Chamber (Section D-D)

Note:

1. All dimensions are in mm
2. The collected leachate will be reused to maintain moisture content in the compost boxes.

PROJECT: EMERGENCY MULTI-SECTOR ROHINGYA CRISIS RESPONSE PROJECT (EMCRP): DESIGN (INCLUDING FEASIBILITY STUDY) OF FECAL SLUDGE AND SOLID WASTE MANAGEMENT SYSTEM (CONTRACT PACKAGE NO. S-15)			
CLIENT: DEPARTMENT OF PUBLIC HEALTH ENGINEERING			
CONSULTANT: ITN-BUET, BRTC, BUET, DHAKA-1000			
DRAWING TITLE:	Sectional View of Leachate Storage Chamber (Section D-D)		
DESIGNED BY:	TEAM LEADER:	CAD BY:	1. RAJESH CHAKRABORTY 2. MD. TARIQUL ISLAM
ITN- BUET	DR. MUHAMMAD ASHRAF ALI	DRG. NO.:	EMCRP/SWM/BoxCompost/S 28

Appendix-5: Estimated cost (in Taka) of SWMS: Unit cost of each part are as follows:

SL	Description of work	Unit Cost (BDT)	
A	**SWMS**		
1.	Box Composting (for 5,000 People),	**Tk**	**1,603,729.20**
2.	Shed for Composting System (for 5,000 People)	**Tk**	**2,315,788.78**
3.	Maturing Box	**Tk**	**146,644.85**
4.	Leachate storage chamber	**Tk**	**66,176.17**
5.	Storage Chamber	**Tk**	**172,457.45**
6.	Boundary wall, Gate and yard development	**Tk**	**515,406.33**
7.	Deep tube well 100mm X 50mm dia	**Tk**	**194,937.00**
8.	Operation room	**Tk**	**487,634.04**
9.	Waste Reception room	**Tk**	**221,626.20**
10.	Approach Road and Drain	**Tk**	**787,153.00**
11.	Solar panel for Electrification & Pump for Tubewell	**Tk**	**335,104.13**
1-11	Total for 01 (one) Solid Waste Composting System comprising of the following components: (Composting box + Shed + Maturing Box + Leachate storage chmber + Waste storage chamber + boundary wall& Gate + Tubewell + Operation room + Waste Reception Chamber + Approach Road + Solar panel & Pump)	**Tk**	**6,846,657.15**
A	For 07 Solid Waste Composting System	**Tk.**	**47,926,600.03**
	01 (one) Bin Composting system	**Tk.**	**123,575.13**
B	Total for 50 (fifty) Bin Composting system	**Tk.**	**6,178,756.40**
	01 (one) Communal Solid Waste Bin	**Tk.**	**62,681.28**
C	Total for 150 (One hundred fifty) Communal Solid Waste Bin	**Tk.**	**9,402,192.00**
	01 (one) Plastic Bucket with Lid	**Tk.**	**220.00**
D	Total for 1,00,000 Plastic Bucket with Lid	**Tk.**	**22,000,000.00**
E	Environmental Mitigation Works (For the full package of work)	**Tk.**	**1,302,000.00**
F	O & M for 07 Composting unit, 150 Communal waste bin & 50 Bin composting system through dump truck & SWTP manpower maintaining Standard Operating Procedure (SOP), arrangement for protecting novel coronavirus. Manpower to be engaged as per the direction of competent authority (For Fixed Item and Reimbursable).	**Tk.**	
		Tk.	**33,743,710.00**
A+B+ C+D+ E+F	Total of (a) Solid Waste Composting System + (b) Bin Composting System +Communal waste bin + Plastic Bucket + (d) Environmental Mitigation Works + (Operation and Maintenance works)	**Tk.**	**120,553,258.43**
	Insurance Coverage	**Tk.**	**1,169,359.40**
	Total Estimated Amount	**Tk.**	**121,722,617.83**

Appendix-6: Labor's Code of Conduct

অঙ্গীকারপত্র

স্থান:

ঠিকাদারী প্রতিষ্ঠান:

আমি . . . . . এই মর্মে অঙ্গীকার করছি যে, কর্মরত থাকা অবস্থায় নিম্নোক্ত আদেশ, নির্দেশ ও নিষেধ সমূহ সদা সর্বদা মেনে চলবো।

১. সকলরোহিঙ্গাজনগোষ্ঠিরসাথেসর্বদানম্রতা, ভদ্রতাওসন্মানেরসাথেব্যবহারবজায়রাখবো।

২. কোনঅবস্থাতেইরোহিঙ্গানারী, শিশুরসাথেকোনপ্রকারসম্পর্কতৈরীকরবোনা।

৩. রাহিঙ্গাজনগোষ্ঠীরইচ্ছাকৃতবাঅনিচ্ছাকৃতকোনপ্রকারসাহায্যসহযোগীতানিবোনা।

৪. কোনঅবস্থাতেইরোহিঙ্গাজনগোষ্ঠিদেরকোনপ্রকারআশ্বাসপ্রদানকিংবাঅঙ্গিকারবদ্ধহবোনা।

৫. কর্মক্ষেত্রেকিংবারোহিঙ্গাক্যাম্পএলাকায়জীবজন্তু, গাছপালাওপরিবেশেরকোনপ্রকারঅনিষ্টকরবোনা।

৬. কর্মক্ষেত্রেসর্বদানিরাপত্তাপোশাক-আশাকওউপকরণপরিধানওব্যবহারকরবো।

৭. সর্বদানিজনিজপরিচয়পত্র (ID Card) প্রদর্শনওসংরক্ষণকরবো।

৮. কোনঅবস্থাতেইরোহিঙ্গাজনগোষ্ঠিওস্থানীয়লোকদেরসাথেকোনপ্রকারঅসামাজিককর্মকান্ডও কোনপ্রকারবিবাদেলিপ্তহবোনা।

৯. যেকোনজরুরীঅবস্থায়সিদ্ধান্তগ্রহণেরক্ষেত্রেসংশ্লিষ্টকর্মকর্তারশরণাপন্নহবো।

উপরোক্তবিষয়সমূহেরযদিকোনব্যতিক্রমঘটেবাঘটাইতাহলেএবিষয়েপ্রশাসনআইনগতযেশাস্তিবাসমাধানগ্রহণকরবেতামেনেনিতেবাধ্যথাকবো।

স্বাক্ষর ও তারিখ

প্রজেক্ট সাইটে যা যা অবশ্যই রাখতে হবে-

১. শ্রমিকওকর্মকর্তাতালিকা

২. হাজিরাখাতা

৩. ছুটিররেজিস্টার

৪. দুর্ঘটনারবিবরণীলিপিবদ্ধকরাররেজিস্টার

৫. অভিযোগলিপিবদ্ধকরাররেজিস্টার

৬. কাজেরবিবরণী

৭. জরুরীঅবস্থায়যোগাযোগেরজন্যকমপক্ষে২জনকর্মকর্তারনাম-পদবীসহমোবাইলনম্বর

৮. বাংলাওইংরেজীতেবড়বড়অক্ষরেদৃশ্যমানস্থানেপ্রদর্শনেরজন্যস্থাপন।

৯. নিকটস্থহাসপাতাল, পুলিশষ্টেশনএবংডাক্তারেরসাথেযোগাযোগেরজন্যমোবাইল/ টেলিফোননম্বরবাংলাওইংরেজীতেবড়বড়অক্ষরেদৃশ্যমানস্থানেপ্রদর্শনেরজন্যস্থাপন।

১০.কাজেরসাইটেপূর্ণাঙ্গতথ্যওকাজেরপরিধিব্যানারআকারেদৃশ্যমানস্থানেপ্রদর্শনেরজন্যস্থাপন।

১১.নিরাপত্তাচিহ্ন, সতর্কতাতথ্যওনিরাপত্তাবেষ্টনীরব্যবস্থাকরা।

১২.নিরাপত্তাউপকরণওসরঞ্জামাদিএবংপ্রাথমিকচিকিৎসারব্যবস্থারাখা।

১৩. জরুরীঅবস্থায়ব্যবহারেরজন্যগাড়িকিংবামোটরসাইকেলেরব্যবস্থারাখা।

১৪.কাজেরঝুঁকিপূর্ণ স্থান দিনে-রাতে সহজে সনাক্ত করা যায় এমন চিহ্ন কিংবা সেফটি লাইটের ব্যবস্থা রাখা।

(বিঃ দ্রঃ রেজিস্টর খাতার উপর প্রত্যেক প্রতিষ্ঠানের নাম ও স্থান উল্লেখ করতে হবে)।

পরিবেশগত সতর্কতাসমূহঃ-

১) প্রয়োজনব্যতীতকোনপ্রকারআগুনধরানোযাবেনা।

২) কখনোইপ্রাণীরঅনিষ্টকরাযাবেনা।

৩) সকলপ্রকারদূষণপরিহারকরতেহবে।

৪) অনুমতিব্যতীতকোনপ্রকারগাছকাটাযাবেনা।

৫) যথাযথসম্পদেরব্যবহারকরতেহবে।

৬) নবায়নযোগ্যউৎসব্যবহারেরসর্বোচ্চচেষ্টাকরতেহবে।

৭) কাজেরশেষেপূর্বেরপরিবেশফিরিয়েদিতেহবে।

Prepared by:

Environmental and Social Safeguard Team, Contract Package No. SD-14, IWM, EMCRP

Reviewed by:

(Md. Ahsanul Kabir)
SD & HP Consultant,
EMCRP (DPHE Part),
Email: makabirbd68@gmail.com

(Mahbubul Alam)
Environmental & Hydrogeologist Consultant,
EMCRP (DPHE Part),
Email: alam.mahbubgeo@gmail.com

(Engr. Ritthick Chowdhury)
Deputy Project Director,
EMCRP, DPHE, Cox's Bazar.
Email:chowritthick@gmail.com

(**Md. Muktadir Harun**)
Social Development Officer, EMCRP, DPHE, Dhaka.
Email: mh.dphe@gmail.com

Approved by:

(Mohammad Abdul Kaium)
Project Director, EMCRP, DPHE, Dhaka.
Email: pddphe.emcrp@gmail.com